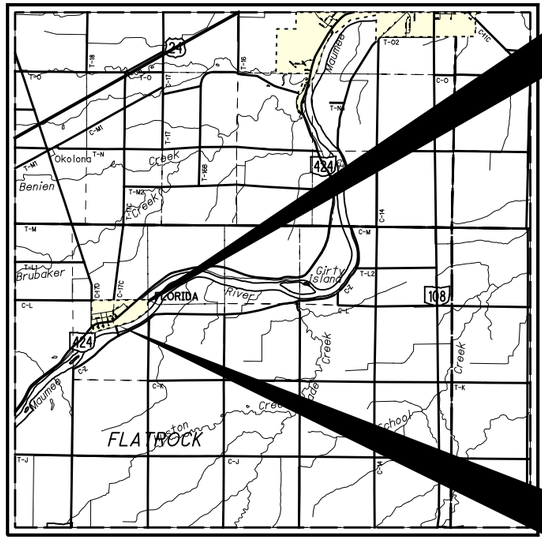

LOCATION MAP

LATITUDE: 41 °19'19" LONGITUDE: 84 °12'02"

SCALE IN MILES

0 1 2 3 4

N

PORTION TO BE IMPROVED
INTERSTATE HIGHWAY
FEDERAL ROUTES
STATE ROUTES
COUNTY & TOWNSHIP ROADS
OTHER ROADS

OFFICE OF THE COUNTY ENGINEER

HEN-17C-0015

HENRY COUNTY ROAD 17C OVER MIAMI AND ERIE CANAL FLORIDA, OHIO HENRY COUNTY

INDEX OF SHEETS:

TITLE SHEET	1
TYPICAL SECTIONS	2
GENERAL NOTES	3
MAINTENANCE OF TRAFFIC	4-5
GENERAL SUMMARY	6
PLAN AND PROFILE AND QUANTITIES	7
CROSS SECTIONS	8-9
LONG SPAN CULVERT	10-20

PROJECT DESCRIPTION

THE WORK CONSISTS OF REPLACING THE COUNTY ROAD 17C BRIDGE OVER THE MIAMI AND ERIE CANAL, AND ASSOCIATED ROADWAY IMPROVEMENTS TO ACCOMODATE THE NEW STRUCTURE.

PROJECT EARTH DISTURBED AREA: 0.26 ACRES
ESTIMATED CONTRACTOR EARTH DISTURBED AREA: 0.00 ACRES
NOTICE OF INTENT EARTH DISTURBED AREA: N/A (NOI NOT REQUIRED)

2013 SPECIFICATIONS

THE STANDARD SPECIFICATIONS OF THE STATE OF OHIO, DEPARTMENT OF TRANSPORTATION, INCLUDING CHANGES AND SUPPLEMENTAL SPECIFICATIONS LISTED IN THE PROPOSAL SHALL GOVERN THIS IMPROVEMENT.

I HEARBY APPROVE THESE PLANS AND DECLARE THAT THE MAKING OF THIS IMPROVEMENT WILL REQUIRE THE CLOSING TO TRAFFIC OF THE HIGHWAY AND THAT DETOURS WILL BE PROVIDED AS INDICATED ON SHEETS 4 AND 5 OF 20

DESIGN DESIGNATION

CURRENT ADT (2015) 1060
DESIGN YEAR ADT (2035) 1160
DESIGN HOURLY VOLUME (2035) 116
DIRECTIONAL DISTRIBUTION 50%
TRUCKS (24 HOUR B&C) 10%
DESIGN SPEED 40 MPH
LEGAL SPEED 35 MPH
DESIGN FUNCTIONAL CLASSIFICATION:
MINOR COLLECTOR-RURAL
NHS PROJECT NO

DESIGN EXCEPTIONS

NONE

UNDERGROUND UTILITIES

CONTACT BOTH SERVICES
CALL TWO WORKING DAYS
BEFORE YOU DIG

CALL
1-800-362-2764
(TOLL FREE)
OHIO UTILITIES PROTECTION SERVICE
NON-MEMBERS
MUST BE CALLED DIRECTLY

OIL & GAS PRODUCERS UNDERGROUND
PROTECTION SERVICE CALL: **1-800-925-0988**

PLAN PREPARED BY:

Mannik Smith GROUP
1800 INDIAN WOOD CIRCLE
MAUMEE, OHIO 43537

ENGINEERS SEAL:
FOR STRUCTURES 20' AND OVER
STATE OF OHIO
R. CHRISTOPHER HOMAN
E-69307
REGISTERED
PROFESSIONAL ENGINEER
SIGNED: R. Christopher Homan
DATE: 2/13/15

ENGINEERS SEAL:
FOR ENTIRE PLAN EXCEPT STRUCTURES 20' AND OVER
STATE OF OHIO
CHRISTOPHER E. BEAULIEU
51775
REGISTERED
PROFESSIONAL ENGINEER
SIGNED: Christopher E. Beaulieu
DATE: 2/13/15

STANDARD CONSTRUCTION DRAWINGS		SUPPLEMENTAL SPECIFICATIONS		SPECIAL PROVISIONS
BP-3.1	07-18-14	800	01-21-15	
BP-4.1	07-19-13	832	01-17-14	
BP-5.1	07-19-13			
BR-2-98	07-20-12			
MT-101.60	07-19-13			

APPROVED _____
DATE _____ HENRY COUNTY COMISSIONER

APPROVED _____
DATE _____ HENRY COUNTY COMISSIONER

APPROVED _____
DATE _____ HENRY COUNTY COMMISSIONER

FEDERAL PROJECT NO. NON-FEDERAL
PID NO.
CONSTRUCTION PROJECT NO.
RAILROAD INVOLVEMENT NONE
HEN-17C-0015

W:\Projects\Projects F-J\HENC0065\CAD\SHEETS\ROADWAY\HENC0065GT001.dgn 2/17/2015 3:25:39 PM

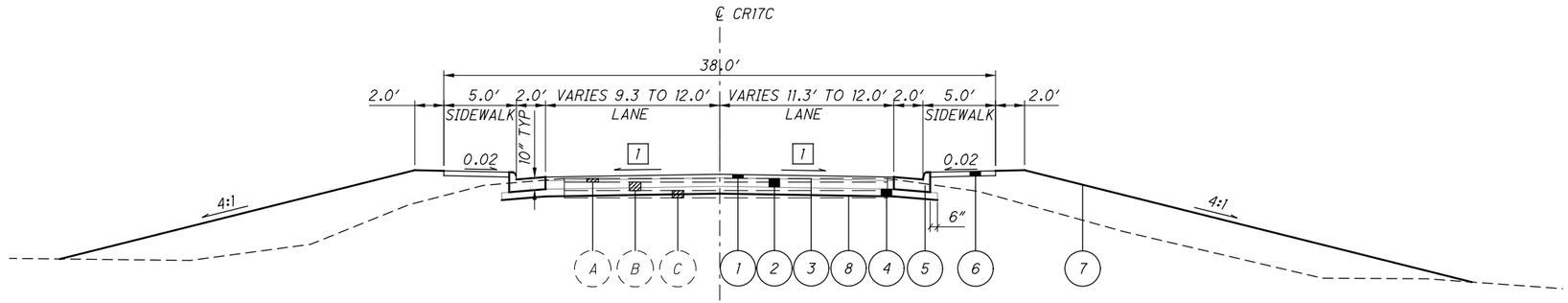

NORMAL SECTION - CR 17C
STA. 8+82.40 TO STA. 9+20.17
STA. 9+78.30 TO STA. 10+10.00

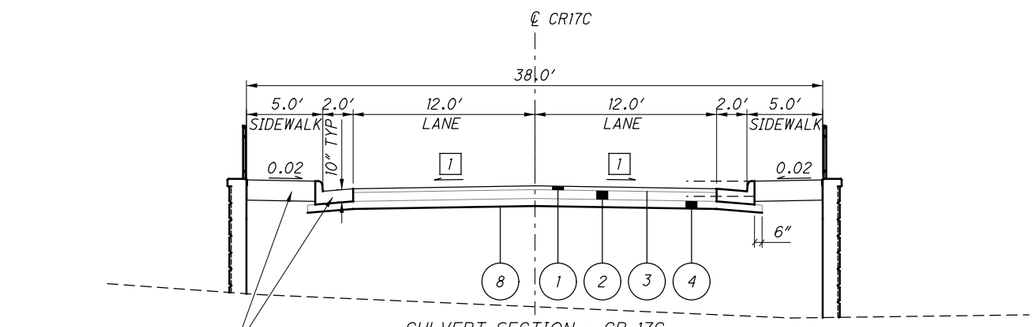

CULVERT SECTION - CR 17C
STA. 9+19.69 TO STA. 9+79.02

LEGEND

1. ITEM 441 - 3″ ASPHALT CONCRETE SURFACE COURSE, TYPE 1, (448), AS PER PLAN
2. ITEM 301 - 7″ ASPHALT CONCRETE BASE, PG64-22
3. ITEM 407 - TACK COAT (0.075 GAL./SQ. YD.)
4. ITEM 304 - 6″ AGGREGATE BASE
5. ITEM 609 - COMBINATION CURB AND GUTTER, TYPE 2
6. ITEM 608 - 4″ CONCRETE WALK
7. ITEM 659 - SEEDING AND MULCHING
8. ITEM 204 - SUBGRADE COMPACTION

- A 3″ ± ASPHALT CONCRETE
- B 7″ ± ASPHALT BASE
- C 6″ ± AGGREGATE BASE

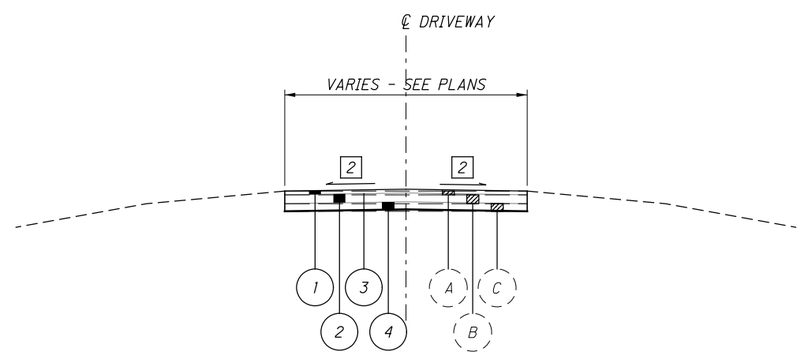

DRIVEWAY

1. VARIES, SEE CROSS SECTIONS
2. VARIES TO MATCH EXISTING

TYPICAL SECTIONS

HENC-17C-0015

w:\projects\Projects F-J\HENC0065\CAD\SHEETS\ROADWAY\HENC0065GY001.dgn 2/13/2015 3:34:00 PM dhess

UTILITIES

LISTED BELOW ARE ALL UTILITIES LOCATED WITHIN THE PROJECT CONSTRUCTION LIMITS TOGETHER WITH THEIR RESPECTIVE OWNERS:

TIME WARNER CABLE	3760 INTERCHANGE DR. COLUMBUS, OH 43204 614-255-6349
OHIO GAS COMPANY	P.O. BOX 528 BRYAN, OH 43506 800-331-7396
TRI COUNTY RURAL ELECTRIC COOP INC	8945 CR K2 P.O. BOX 100 MALINTA, OH 43535 PH: 419-256-7900 FAX: 419-256-6581
TOLEDO EDISON	6099 ANGOLA RD HOLLAND, OH 43528 419-249-5218
CENTURYLINK	122 SOUTH ELIZABETH ST LIMA, OH 45801 419-226-6120

UTILITIES

THE LOCATION OF THE UNDERGROUND UTILITIES SHOWN ON THE PLANS ARE AS OBTAINED FROM THE OWNERS AS REQUIRED BY SECTION 153.64 O.R.C.

WORK LIMITS

THE WORK LIMITS SHOWN ON THESE PLANS ARE FOR PHYSICAL CONSTRUCTION ONLY. PROVIDE THE INSTALLATION AND OPERATION OF ALL WORK ZONE TRAFFIC CONTROL AND WORK ZONE TRAFFIC CONTROL DEVICES REQUIRED BY THESE PLANS WHETHER INSIDE OR OUTSIDE THESE WORK LIMITS.

CLEARING AND GRUBBING

ALTHOUGH THERE ARE NO TREES OR STUMPS SPECIFICALLY MARKED FOR REMOVAL WITHIN THE LIMITS OF THE PROJECT, A LUMP SUM QUANTITY IS INCLUDED IN THE GENERAL SUMMARY FOR ITEM 201, CLEARING AND GRUBBING. ALL PROVISIONS AS SET FORTH IN THE SPECIFICATIONS UNDER THIS ITEM ARE INCLUDED IN THE LUMP SUM PRICE BID FOR ITEM 201, CLEARING AND GRUBBING.

ITEM 441 - ASHPALT CONCRETE SURFACE COURSE, TYPE 1, (448), AS PER PLAN

THIS ITEM SHALL BE TO INSTALL ASPHALT SURFACE COURSE, TYPE 1, (448), WITH PG64-22. THE ASPHALT CONCRETE SHALL BE APPLIES IN LIFTS NOT TO EXCEE 2 (TWO) INCHES THICK.

BASIS OF PAYMENT, THE DEPARTMENT WILL PAY FOR ACCEPTED QUANTITIES AT THE CONTRACT UNIT PRICE AS FOLLOWS:

ITEM	UNIT	DESCRIPTION
441	CY	ASPHALT CONCRETE SURFACE COURSE TYPE 1, (448), AS PER PLAN

SURVEYING PARAMETERS

PRIMARY PROJECT CONTROL MONUMENTS GOVERN ALL POSITIONING ON ODOT PROJECTS. SEE SHEET ___ OF THE PLANS FOR A TABLE CONTAINING PROJECT CONTROL INFORMATION.

USE THE FOLLOWING PROJECT CONTROL, VERTICAL POSITIONING, AND HORIZONTAL POSITIONING PARAMETERS FOR ALL SURVEYING:

PROJECT CONTROL

POSITIONING METHOD: ODOT VRS
MONUMENT TYPE: CORS STATIONS

VERTICAL POSITIONING

ORTHOMETRIC HEIGHT DATUM: NAVD 88
GEOID: GEOID9

HORIZONTAL POSITIONING

REFERENCE FRAME: NAD 83 (2011)
ELLIPSOID: GRS 80
MAP PROJECTION: LAMBERT CONFORMAL CONIC
COORDINATE SYSTEM: OHIO STATE PLANE - NORTH ZONE
COMBINED SCALE FACTOR: 1.000000
ORIGIN OF COORDINATE
SYSTEM: 0.00, 0.00

USE THE POSITIONING METHODS AND MONUMENT TYPE USED IN THE ORIGINAL SURVEY TO RESTORE ALL MONUMENTS RELATED TO PRIMARY PROJECT CONTROL THAT ARE DAMAGED OR DESTROYED BY CONSTRUCTION ACTIVITIES. RESTORE THE DAMAGED OR DESTROYED MONUMENTS IN ACCORDANCE WITH SUPPLEMENTAL SPECIFICATION 823.

UNITS ARE IN U.S. SURVEY FEET. USE THE FOLLOWING CONVERSION FACTOR: 1 METER = 3.280833333 U.S. SURVEY FEET.

PROTECTION OF RIGHT-OF-WAY LANDSCAPING

PRIOR TO BEGINNING WORK, THE CONTRACTOR, THE PROJECT ENGINEER, AND A REPRESENTATIVE OF THE MAINTAINING AGENCY WILL REVIEW AND RECORD ALL LANDSCAPING ITEMS WITHIN THE RIGHT OF WAY (BOTH WITHIN AND OUTSIDE THE CONSTRUCTION LIMITS) A RECORD OF THIS REVIEW WILL BE KEPT IN THE PROJECT ENGINEER'S FILES. PRIOR TO FINAL ACCEPTANCE, A FINAL REVIEW OF LANDSCAPING ITEMS WILL BE MADE.

CONSTRICT ALL ACTIVITIES, EQUIPMENT STORAGE, AND STAGING TO WITHIN THE CONSTRUCTION LIMITS. UNLESS OTHERWISE IDENTIFIED IN THE PLANS OR PROPOSAL, THE CONSTRUCTION LIMITS ARE IDENTIFIED AS 30 FEET FROM THE EDGE OF PAVEMENT.

SUBMIT A WRITTEN REQUEST TO THE PROJECT ENGINEER TO USE ANY AREA OUTSIDE THESE LIMITS. THE DOCUMENT SUBMITTED MUST CLEARLY IDENTIFY THE AREA AND EXPLAIN THE PROPOSED USE AND RESTORATION OF THE AREA. USE OF THESE AREAS FOR DISPOSAL OF WASTE MATERIAL AND CONSTRUCTION DEBRIS, EXCAVATION OF BORROW MATERIAL AND PLACEMENT OF PORTABLE PLANTS IS PROHIBITED. THE REQUEST MUST BE APPROVED, IN WRITING, BEFORE THE CONTRACTOR HAS PERMISSION TO USE THE AREA.

ANY ITEMS DAMAGED BEYOND THE CONSTRUCTION LIMITS AS DEFINED ABOVE WILL BE REPLACED IN KIND OR AS APPROVED BY THE PROJECT ENGINEER.

REVIEW OF DRAINAGE FACILITIES

BEFORE ANY WORK IS STARTED ON THE PROJECT AND AGAIN BEFORE FINAL ACCEPTANCE BY THE STATE, REPRESENTATIVES OF THE COUNTY AND THE CONTRACTOR, ALONG WITH LOCAL REPRESENTATIVES, SHALL MAKE AN INSPECTION OF ALL EXISTING SEWERS WHICH ARE TO REMAIN IN SERVICE AND WHICH MAY BE AFFECTED BY THE WORK. THE CONDITION OF THE EXISTING CONDUITS AND THEIR APPURTENANCE SHALL BE DETERMINED FROM FIELD OBSERVATIONS. RECORDS OF THE INSPECTION SHALL BE KEPT IN WRITING BY THE COUNTY.

ALL EXISTING SEWERS INSPECTED INITIALLY BY THE ABOVE MENTIONED PARTIES SHALL BE MAINTAINED AND LEFT IN A CONDITION REASONABLY COMPARABLE TO THAT DETERMINED BY THE ORIGINAL INSPECTION. ANY CHANGE IN THE CONDITION RESULTING FROM THE CONTRACTOR'S OPERATIONS SHALL BE CORRECTED BY THE CONTRACTOR TO THE SATISFACTION OF THE ENGINEER AT THE CONTRACTOR'S EXPENSE.

SEEDING AND MULCHING

THE FOLLOWING QUANTITIES ARE PROVIDED TO PROMOTE GROWTH AND CARE OF PERMANENT SEEDED AREAS:

659, TOPSOIL 12 CU. YD.

659, SEEDING AND MULCHING 106 SQ. YD.

659, REPAIR SEEDING AND MULCHING 6 SQ. YD

659, COMMERCIAL FERTILIZER 0.01 TON

659, LIME 0.03 ACRES

659, WATER 1 M. GAL.

SEEDING AND MULCHING SHALL BE APPLIED TO ALL AREAS OF EXPOSED SOIL BETWEEN THE RIGHT-OF-WAY LINES, AND WITHIN THE CONSTRUCTION LIMITS FOR AREAS OUTSIDE THE RIGHT-OF-WAY LINES COVERED BY WORK AGREEMENT OR SLOPE EASEMENT. QUANTITY CALCULATIONS FOR SEEDING AND MULCHING ARE BASED ON THESE LIMITS.

STREAM CHANNEL EXCAVATION

STREAM CHANNEL EXCAVATION WITHIN "WATERS OF THE US" IS SUBJECT TO US ARMY CORPS OF ENGINEERS (USACE)REGULATORY JURISDICTION AND WILL REQUIRE AUTHORIZATION BY THE USACE VIA THE WATERWAY PERMITTING PROCESS (404/401). IN ACCORDANCE WITH THE APPLICABLE WATERWAY PERMITS (404/401) STREAM CHANNEL EXCAVATION CAN NOT EXCEED THE QUANTITIES AND/OR SURFACE AREA THAT HAS BEEN PERMITTED. THE WATERWAY PERMITS ARE ATTACHED TO THE CONSTRUCTION PLANS AS SPECIAL PROVISIONS AND WILL BE AVAILABLE IN THE PROJECT CONSTRUCTION OFFICE.

TAKE ALL PRECAUTIONS NECESSARY TO PREVENT ANY INCIDENTAL DISCHARGES ASSOCIATED WITH THE EXCAVATION AND HAULING OF MATERIAL FROM THE STREAM CHANNEL. THIS PERTAINS TO ANY EXCAVATION OPERATIONS SUCH AS, FOUNDATION PIER OR ABUTMENT EXCAVATION, CHANNEL CLEANOUT, EXCAVATION FOR ROCK CHANNEL PROTECTION AND REMOVAL OF ANY TEMPORARY FILL ASSOCIATED WITH CONSTRUCTION OPERATIONS.

ITEM 204 - SUBGRADE COMPACTION AND PROOF ROLLING

CONSTRUCT THE SUBGRADE AS FOLLOWS AND IN THE FOLLOWING SEQUENCE:

1. SHAPE THE SUBGRADE TO WITHIN 0.2 FEET OF THE PLAN SUBGRADE ELEVATION.

2. EXCAVATE AND REPLACE UNSUITABLE SUBGRADE BEFORE PROOF ROLLING.

   UNSUITABLE SUBGRADE INCLUDES UNSUITABLE SOIL (A-4B, A-2-5, A-5, A-7-5, AND SOIL WITH A LIQUID LIMIT GREATER THAN 65) AND ANY COAL, SHALE, OR ROCK WHICH NEEDS TO BE REMOVED ACCORDING TO 204.05.

   IF THERE IS UNSUITABLE SUBGRADE IN A SHALLOW FILL LOCATION, EXCAVATE AND REPLACE THE UNSUITABLE SUBGRADE BEFORE CONSTRUCTING THE SHALLOW FILL AND SHAPING THE SUBGRADE.

3. COMPACT THE SUBGRADE ACCORDING TO 204.03.

4. THE ENGINEER WILL IDENTIFY THE ACTUAL LIMITS OF EXCAVATION FOR UNSTABLE SUBGRADE BASED ON THE PROOF ROLLING RESULTS AND VISUAL OBSERVATIONS.

   PROOF ROLL THE COMPACTED SUBGRADE ACCORDING TO 204.06.

5. EXCAVATE UNSTABLE SUBGRADE AS DIRECTED BY THE ENGINEER AND STABILIZE BY REPLACING WITH THE SPECIFIED MATERIALS ACCORDING TO 204.07. EXCAVATIONS WILL EXTEND 18 INCHES BEYOND THE EDGE OF THE SURFACE OF THE PAVEMENT, PAVED SHOULDERS, OR PAVED MEDIANS.

6. PROOF ROLL THE STABILIZED AREAS ACCORDING TO 204.06 TO VERIFY STABILITY.

7. FINE GRADE THE SUBGRADE TO THE SPECIFIED GRADE.

THE FOLLOWING ESTIMATED QUANTITIES HAVE BEEN INCLUDED IN THE GENERAL SUMMARY FOR USE AS DIRECTED BY THE ENGINEER FOR THE WORK NOTED ABOVE:

ITEM 204 - PROOF ROLLING

THE FOLLOWING QUANTITY IS PROVIDED IN THE GENERAL SUMMARY TO ADDRESS LOCATIONS REQUIRING PROOF ROLLING. SEE PLAN SHEET NO. ___ FOR ADDITIONAL INFORMATION.

ITEM 204 - PROOF ROLLING 1 HOUR.

CALCULATED BJK
CHECKED BJB

GENERAL NOTES

HEN-17C-015

w:\projects\Projects F-J\HENC0065\CAD\SHEETS\ROADWAY\HENC0065GN001.dgn 2/13/2015 3:34:00 PM dhess

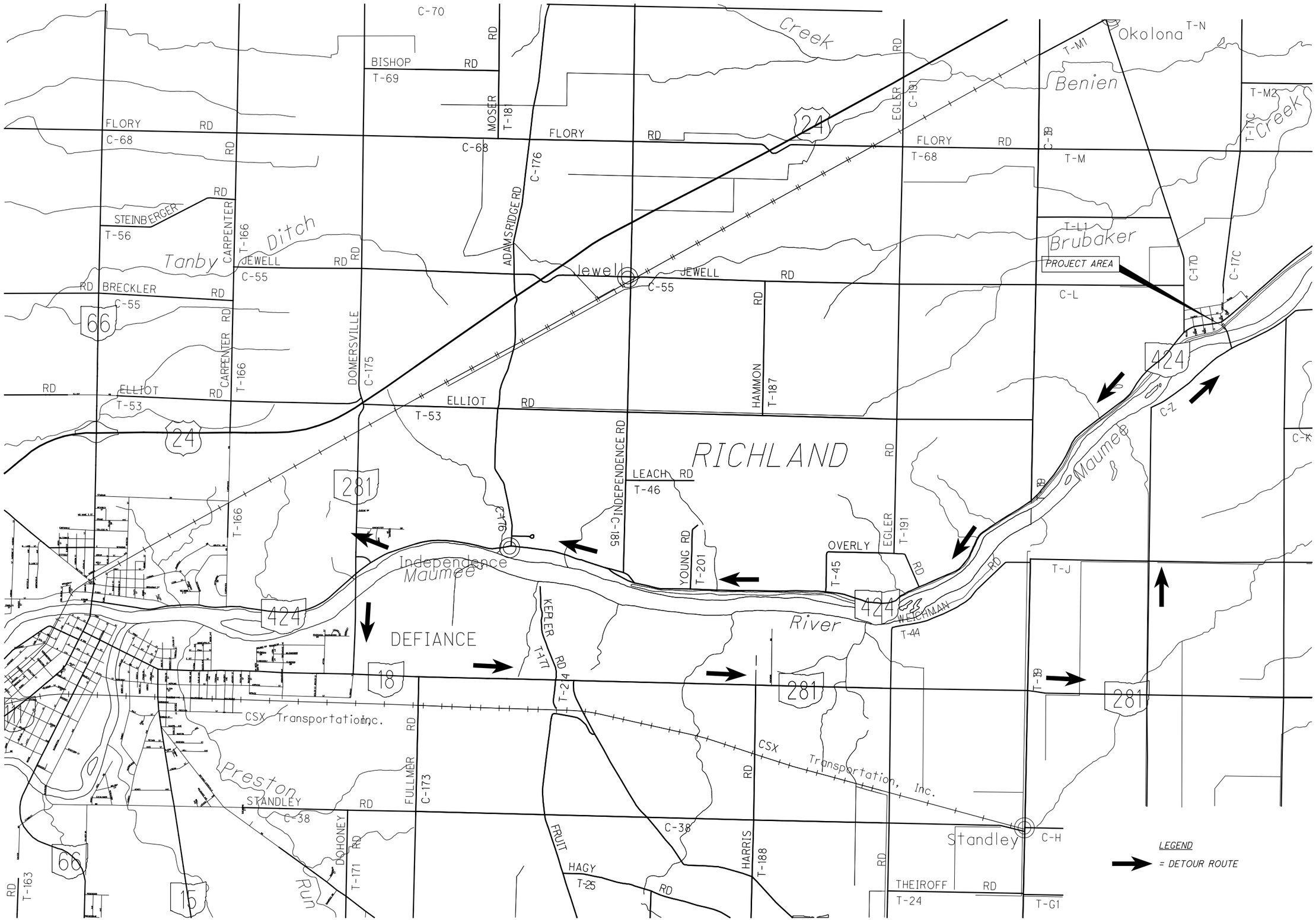

CALCULATED BJK
CHECKED BJB

MAINTENANCE OF TRAFFIC DETOUR MAP (ALTERNATE 1)

HEN-17C-0015

w:\projects\Projects F-J\HEN0065\CAD\SHEETS\ROADWAY\HEN0065MD001.dgn 2/13/2015 3:34:01 PM dhess

MAINTAINING TRAFFIC

METHODS OF MAINTAINING TRAFFIC SHALL BE IN ACCORDANCE WITH ITEM 614, THE OHIO MANUAL OF UNIFORM TRAFFIC CONTROL DEVICES (OMUTCD), AND THE FOLLOWING:

THE CONSTRUCTION WILL REQUIRE THE CLOSING OF CR 17C TO THROUGH TRAFFIC. THE CONTRACTOR SHALL PROVIDE, ERECT, AND MAINTAIN SIGNS PER OMUTCD. FOR EACH CALENDAR DAY BEYOND THE RESPECTIVE CALENDAR DAYS ALLOWED THAT THE ROADWAY REMAINS CLOSED TO TRAFFIC, THE CONTRACTOR WILL BE ASSESSED LIQUIDATED DAMAGES IN THE AMOUNT NOTED IN SECTION 108.07 OF THE CONSTRUCTION AND MATERIAL SPECIFICATIONS.

THE CONTRACTOR SHALL PROVIDE, ERECT, AND MAINTAIN TRAFFIC CONTROL BARRICADES, SIGNS, ETC. AS PER ODOT STANDARD CONSTRUCTION DRAWING MT-101.60.

TRAFFIC CONTROL DEVICES SHALL BE SET UP PRIOR TO THE START OF CONSTRUCTION AND SHALL BE PROPERLY MAINTAINED DURING THE TIME SUCH SPECIAL CONDITIONS EXIST. THEY SHALL REMAIN IN PLACE ONLY AS LONG AS THEY ARE NEEDED AND SHALL BE IMMEDIATELY REMOVED THEREAFTER. ALL SIGNS WITH MESSAGES WHICH DO NOT APPLY DURING A CERTAIN PERIOD SHALL BE COVERED OR SET ASIDE OUT OF VIEW OF TRAFFIC. ALL TRAFFIC CONTROL DEVICES SHALL BE KEPT IN PROPER POSITION, CLEAN, LEGIBLE, AND IN GOOD WORKING CONDITION

THE FOLLOWING QUANTITIES HAVE BEEN CARRIED TO THE GENERAL SUMMARY FOR USE MAINTAINING TRAFFIC:

ITEM 614 MAINTAINING TRAFFIC LUMP SUM

ALL WORK AND TRAFFIC CONTROL DEVICES SHALL BE IN ACCORDANCE WITH CMS 614 AND OTHER APPLICABLE PORTIONS OF THE CONSTRUCTION AND MATERIAL SPECIFICATIONS, AS WELL AS THE OMUTCD. PAYMENT FOR ALL LABOR, EQUIPMENT AND MATERIALS SHALL BE INCLUDED IN THE LUMP SUM CONTRACT PRICE FOR ITEM 614, MAINTAINING TRAFFIC, UNLESS SEPARATELY ITEMIZED IN THE PLAN.

NOTICE OF CLOSURE

NOTIFY THE ENGINEER IN WRITING AT LEAST 7 DAYS IN ADVANCE OF INTENDED ROAD CLOSURE.

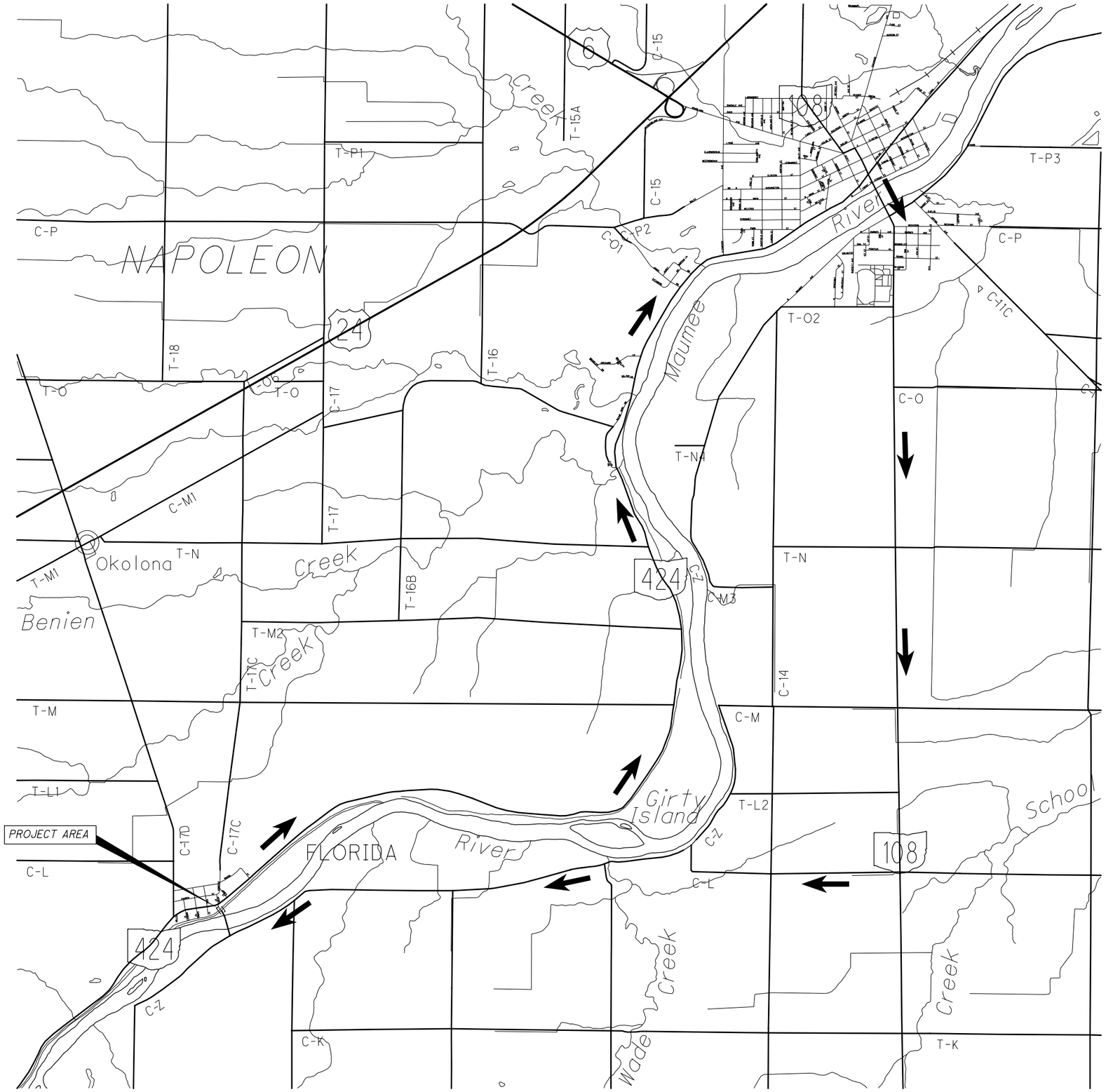

LEGEND

= DETOUR ROUTE

CALCULATED BJK
CHECKED BJB

MAINTENANCE OF TRAFFIC
DETOUR MAP (ALTERNATE 2)

HEN-17C-0015

w:\projects\Projects F-J\HEN0065\CAD\SHEETS\ROADWAY\HEN0065MD002.dgn 2/13/2015 3:34:01 PM dhess

SHEET NUMBER										PARTICIPATION				ITEM	ITEM EXT	GRAND TOTAL	UNIT	DESCRIPTION	SEE SHEET NO.
3	7	8,9							OFFICE CALCS										
																		ROADWAY	
														201	11000	LS		CLEARING AND GRUBBING	
									385					202	23000	385	SY	PAVEMENT REMOVED	
	107													202	30000	107	SF	WALK REMOVED	
	71													202	38000	71	FT	GUARDRAIL REMOVED	
		17												203	10000	17	CY	EXCAVATION	
									385					204	10000	385	SY	SUBGRADE COMPACTION	
1														204	45000	1	HOUR	PROOF ROLLING	
		247												203	20000	247	CY	EMBANKMENT	
	326													608	10000	326	SF	4" CONCRETE WALK	
																		EROSION CONTROL	
12														659	00300	12	CY	TOPSOIL	
106														659	10000	106	SY	SEEDING AND MULCHING	
6														659	14000	6	SY	REPAIR SEEDING AND MULCHING	
0.01														659	20000	0.01	TON	COMMERCIAL FERTILIZER	
0.03														659	31000	0.03	ACRE	LIME	
1														659	35000	1	MGAL	WATER	
																		PAVEMENT	
									77					301	46000	77	CY	ASPHALT CONCRETE BASE, PG64-22	
									72					304	20000	72	CY	AGGREGATE BASE	
									30					407	10000	30	GAL	TACK COAT	
									33					441	50101	33	CY	ASPHALT CONCRETE SURFACE COURSE, TYPE 1, (448), AS PER PLAN	3
	103													609	12000	103	FT	COMBINATION CURB AND GUTTER, TYPE 2	
																		TRAFFIC CONTROL	
									0.02					642	00290	0.02	MILE	CENTER LINE	
																		INCIDENTALS	
														614	11000	LS		MAINTAINING TRAFFIC	
														623	10000	LS		CONSTRUCTION LAYOUT STAKES AND SURVEYING	
														624	10000	LS		MOBILIZATION	

CALCULATED BJK
CHECKED BJB

GENERAL SUMMARY

HEN-17C-015

w:\projects\Projects F-J\HENC0065\CAD\SHEETS\ROADWAY\HENC0065GG001.dgn 2/13/2015 3:34:02 PM dhess

POINT NUMBER	STATION	OFFSET	DESCRIPTION	NORTHING	EASTING	ELEVATION
1622	8+12.28	7.60 RT	MAG	607473.96	1501543.38	672.71
1623	8+61.69	1.93 RT	MAG	607511.97	1501510.88	671.59
1624	9+11.55	0.01 RT	MAG	607550.01	1501478.35	670.89
1625	9+83.57	0.01 RT	MAG	607603.43	1501432.54	671.12
1626	10+13.24	1.01 LT	MAG	607626.13	1501413.40	670.28
1627	10+61.75	9.47 LT	MAG	607664.08	1501380.77	669.48

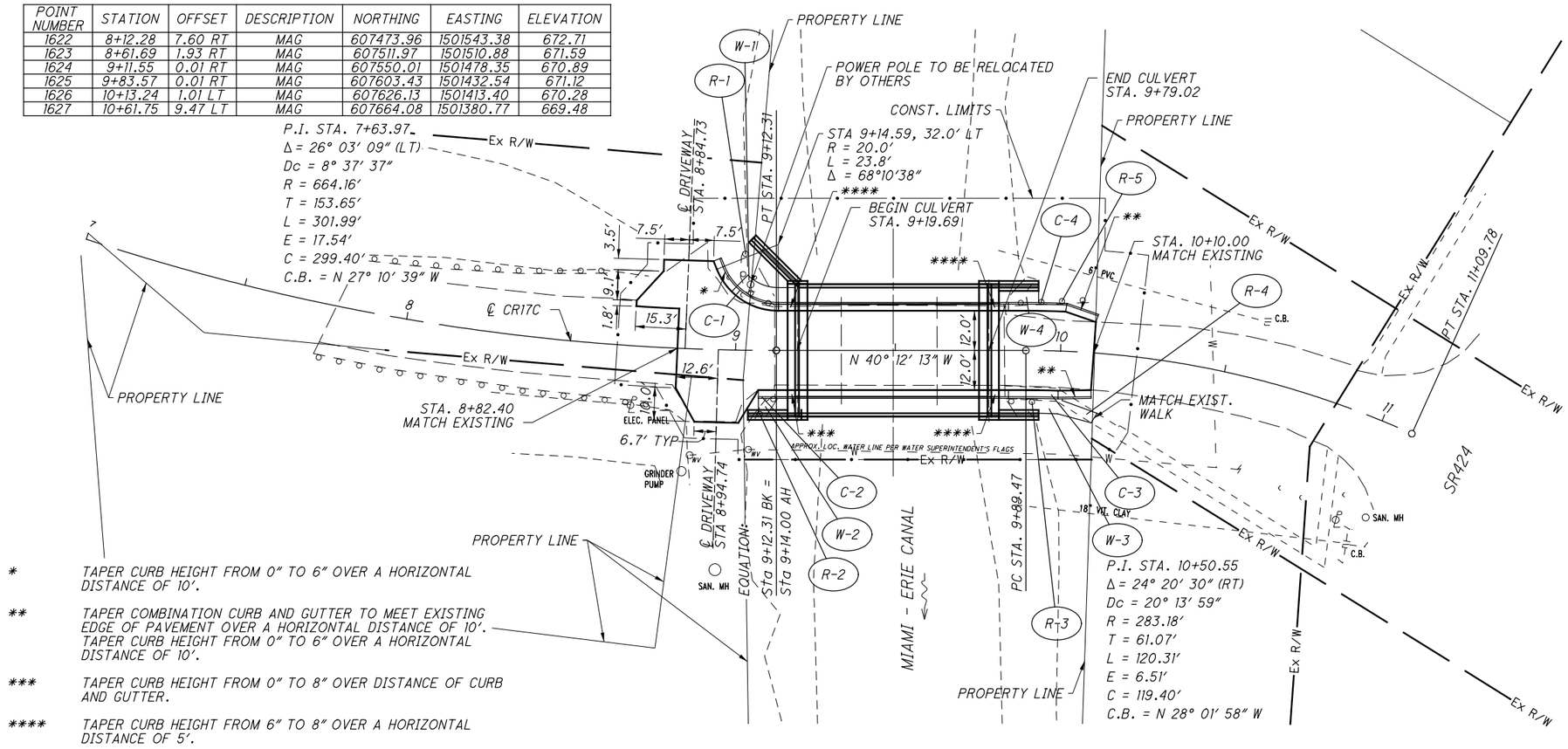

* TAPER CURB HEIGHT FROM 0″ TO 6″ OVER A HORIZONTAL DISTANCE OF 10′.

** TAPER COMBINATION CURB AND GUTTER TO MEET EXISTING EDGE OF PAVEMENT OVER A HORIZONTAL DISTANCE OF 10′. TAPER CURB HEIGHT FROM 0″ TO 6″ OVER A HORIZONTAL DISTANCE OF 10′.

*** TAPER CURB HEIGHT FROM 0″ TO 8″ OVER DISTANCE OF CURB AND GUTTER.

**** TAPER CURB HEIGHT FROM 6″ TO 8″ OVER A HORIZONTAL DISTANCE OF 5′.

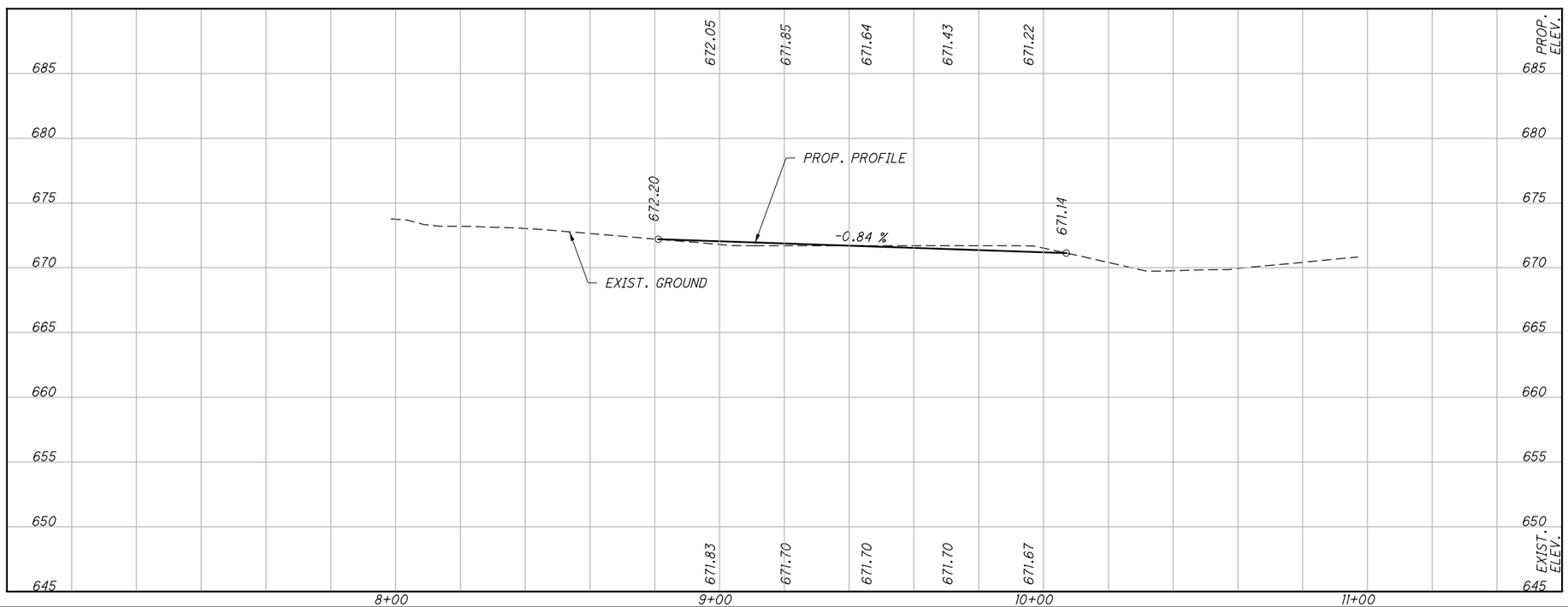

REF NO.	STATION FROM	STATION TO	SIDE	202 WALK REMOVED	202 GUARDRAIL REMOVED	608 4″ CONCRETE WALK	609 COMBINATION CURB AND GUTTER, TYPE 2
				SF	FT	SF	FT
C-1	8+94.45	9+19.69	LT				29
C-2	9+07.00	9+19.69	RT				11
C-3	9+79.02	10+10.19	RT				30
C-4	9+79.02	10+10.49	LT				33
R-1	9+01.15	9+11.50	LT		25		
R-2	9+06.12	9+11.08	RT		9		
R-3	9+83.33	9+94.18	RT		11		
R-4	9+83.16	10+12.48	RT	107			
R-5	9+83.05	10+07.59	LT		26		
W-1	9+00.21	9+19.69	LT			77	
W-2	9+07.03	9+19.69	RT			50	
W-3	9+79.02	10+12.48	RT			135	
W-4	9+79.02	9+93.07	LT			64	
TOTALS CARRIED TO GENERAL SUMMARY				107	71	326	103

HORIZONTAL SCALE IN FEET 0 10 20 40

CALCULATED BJK
CHECKED BJB

PLAN AND PROFILE

HEN-0017C-015

w:\projects\Projects F-J\HENC0065\CAD\SHEETS\ROADWAY\HENC0065GP001.dgn 2/13/2015 3:34:14 PM dhess

SEEDING END WIDTH	SEEDING SQ. YDS.
0	
	7
30	
	21
20	
	24
5	
	0
	52

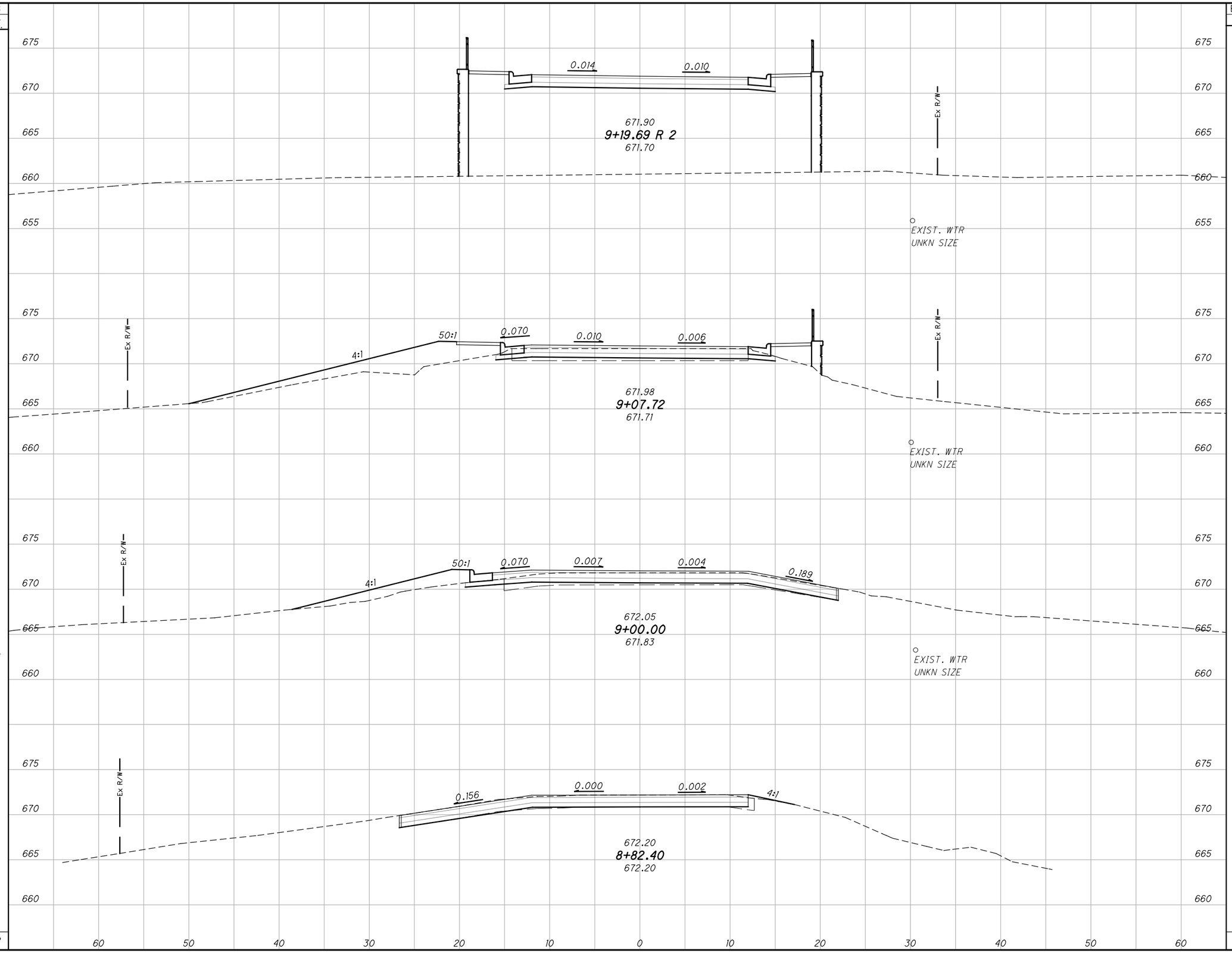

END AREA CUT	END AREA FILL	VOLUME CUT	VOLUME FILL
0	374		
		1	91
4	51		
		1	10
3	20		
		2	7
1	1		
		0	0
		4	108

CALCULATED BJK
CHECKED BJB

CROSS SECTIONS
STA. 8+82.40 TO STA. 9+20.17

HEN-0017C-015

w:\projects\Projects F-J\HENC0065\CAD\SHEETS\ROADWAY\HENC0065XS001.dgn 2/13/2015 3:34:15 PM dhess

SEEDING END WIDTH	SEEDING SQ. YDS.	END AREA CUT	END AREA FILL	VOLUME CUT	VOLUME FILL
13	24	7	7	4	8
30	30	12	35	4	16
55	0	20	103	5	115
0	0	0	419	0	0
	54			13	139

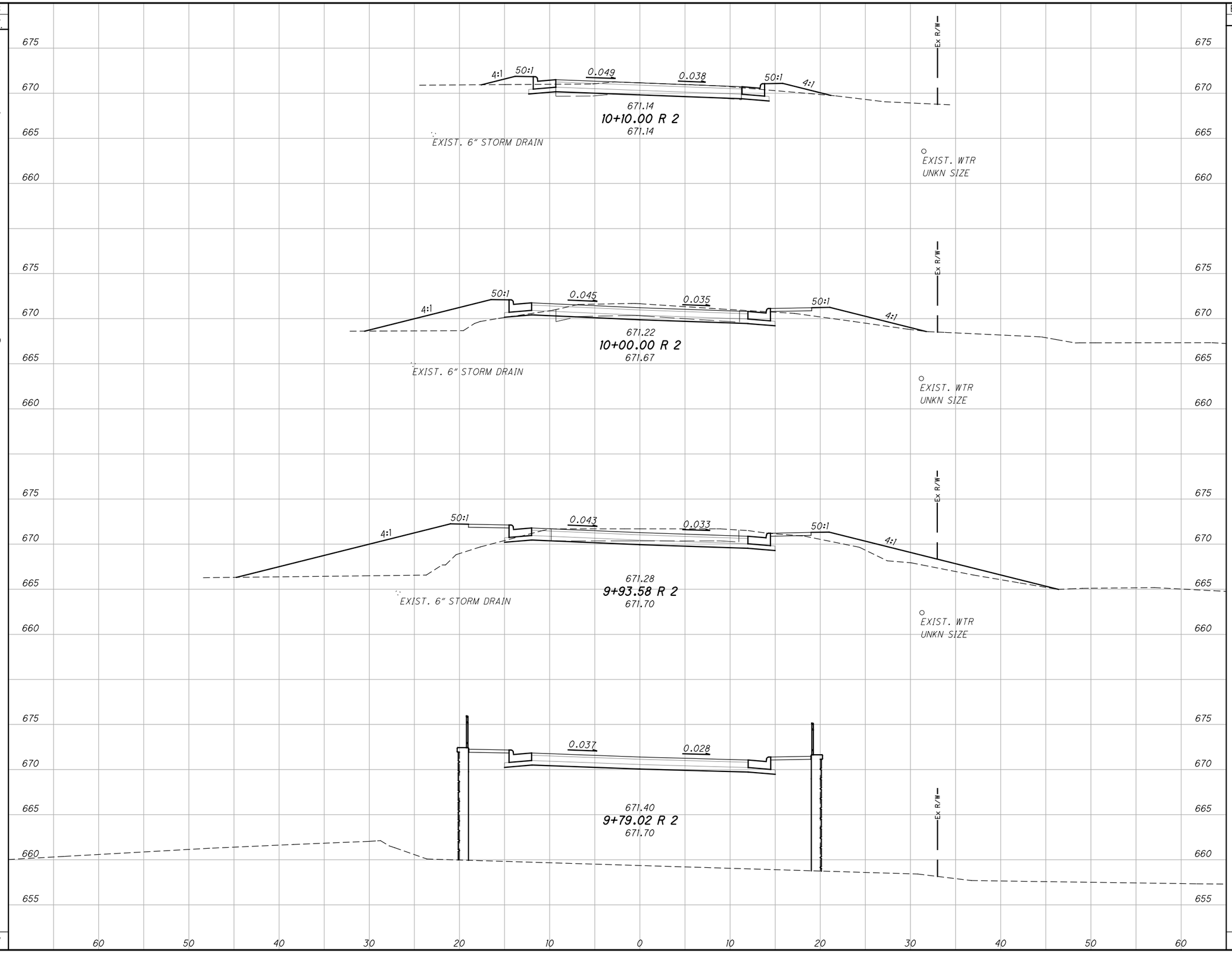

CALCULATED BJK
CHECKED BJB

CROSS SECTIONS
STA. 9+78.30 TO STA. 10+10.00

HEN-0017C-015

w:\projects\Projects F-J\HENC0065\CAD\SHEETS\ROADWAY\HENC0065XS001.dgn 2/13/2015 3:34:15 PM dhess

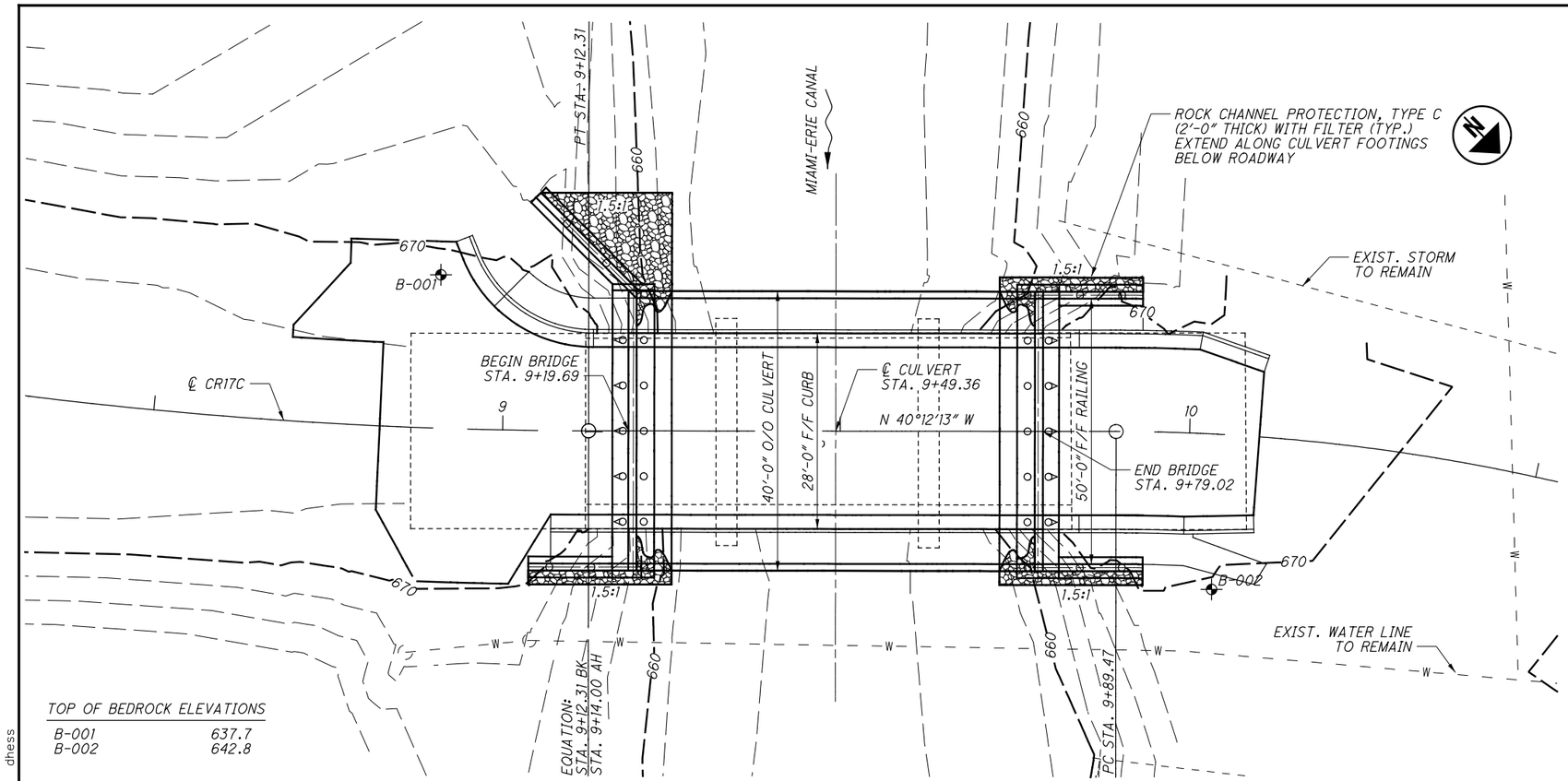

TOP OF BEDROCK ELEVATIONS

B-001	637.7
B-002	642.8

PLAN

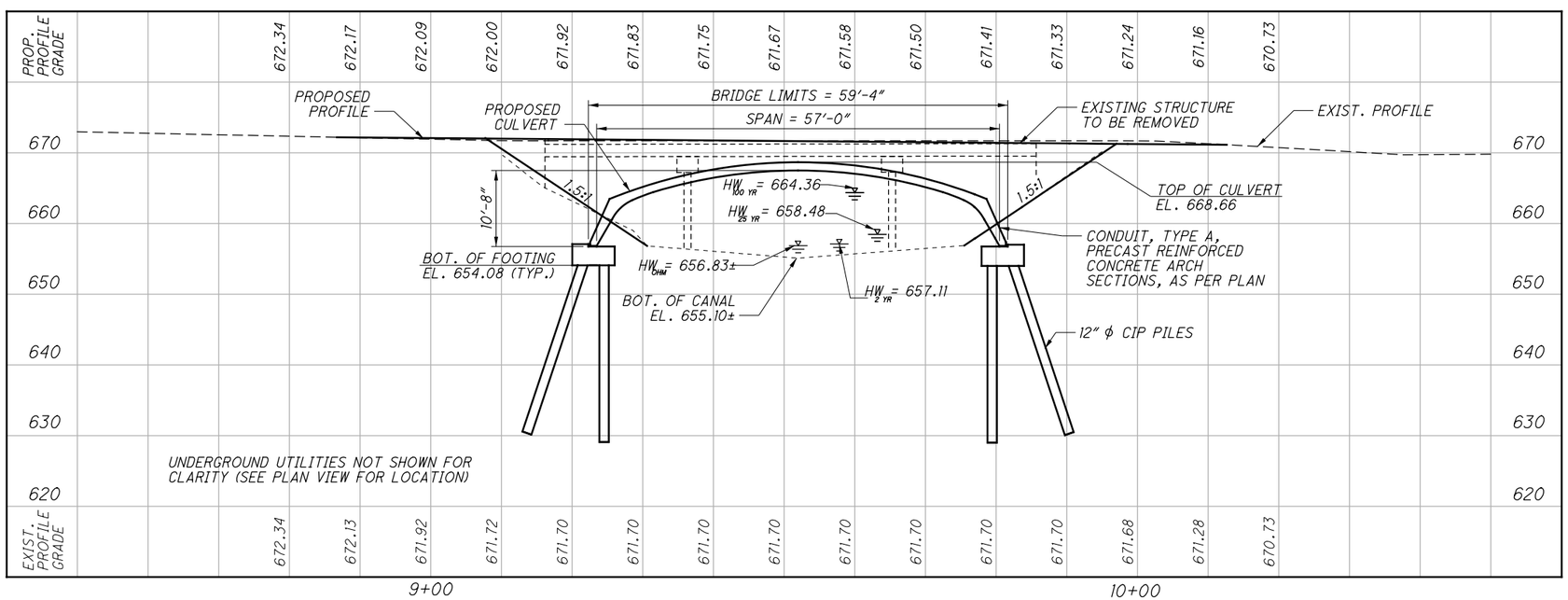

PROFILE ALONG ℄ CR17C

BENCHMARK DATA

BM #1 STA. 8+12.27,	ELEV. 672.71,	OFFSET 7.60' RT
BM #2 STA. 8+61.69,	ELEV. 671.59,	OFFSET 1.93' RT
BM #3 STA. 9+11.57,	ELEV. 670.89,	OFFSET 0.02' RT
BM #4 STA. 9+83.63,	ELEV. 671.12,	OFFSET 0.07' LT

FOR ADDITIONAL BENCHMARK INFORMATION. SEE ROADWAY PLAN SHEET 7/21

NOTES

EARTHWORK LIMITS SHOWN ARE APPROXIMATE. ACTUAL SLOPES SHALL CONFORM TO PLAN CROSS SECTIONS.

DESIGN TRAFFIC:

2015 ADT = 1060	2015 ADTT = 106
2035 ADT = 1160	2035 ADTT =116

LEGEND

- BORING LOCATION (LOCATIONS ARE APPROXIMATE)
- CHANNEL EXCAVATION

HYDRAULIC DATA

DRAINAGE AREA = 4.0 SQ. MILES

Q (25) = 366 CFS	V (25) = 1.68 FT/S
Q (100) = 1850 CFS	V (100) = 3.63 FT/S

STRUCTURE CLEARS THE 100 YEAR DESIGN HW BY 3+ FEET.

ESTIMATED PILE PAY LENGTH
REAR ABUTMENT (CIP PILE) = 25 FT
FORWARD ABUTMENT (CIP PILE) = 25 FT

EXISTING STRUCTURE

TYPE: THREE SPAN STEEL BEAM BRIDGE WITH REINFORCED CONCRETE DECK, CAPPED PILE PIERS, AND FULL HEIGHT STONE AND CONCRETE ABUTMENTS ON SPREAD FOOTINGS

SPANS: 20'-6"±, 29'-0"±, 20'-6"±
ROADWAY: 26'-2" WIDTH F/F RAILING
LOADING: HS20 CASE II AND ALTERNATE MILITARY
SKEW: 00°00'00"
APPROACH SLABS: 25'-0"
ALIGNMENT: TANGENT
CROWN: .0156 FT/FT
STRUCTURAL FILE NUMBER: 3530256
DATE BUILT: 1969
DISPOSITION: FAIR CONDITION

PROPOSED STRUCTURE

TYPE: SINGLE SPAN CONCRETE CULVERT WITH REINFORCED CONCRETE FOUNDATIONS ON CIP PILES

SPANS: 57'-0"
ROADWAY: 28'-0" TOE/TOE CURB
LOADING: HL93
SKEW: NONE
APPROACH SLABS: NONE
ALIGNMENT: TANGENT
CROWN: .0156 FT/FT
COORDINATES: LATITUDE 41°19'18"
LONGITUDE 84°12'01"

Mannik Smith GROUP
1800 INDIAN WOOD CIRCLE
MAUMEE, OHIO 43537

DESIGNED	DRAWN	REVIEWED	DATE
BWP	DRH	RCH	10/14
CHECKED	REVISED	STRUCTURE FILE NUMBER	
TLR	—	TBD	

HENRY COUNTY
STA. 9+19.69
STA. 9+79.02

SITE PLAN
HEN-0017C-0015
CR17C OVER MIAMI & ERIE CANAL

HEN-0017C-0015

W:\Projects\Projects F-J\HENC0065\CAD\SHEETS\17C_0015CSP001.dgn 2/13/2015 3:34:17 PM dhess

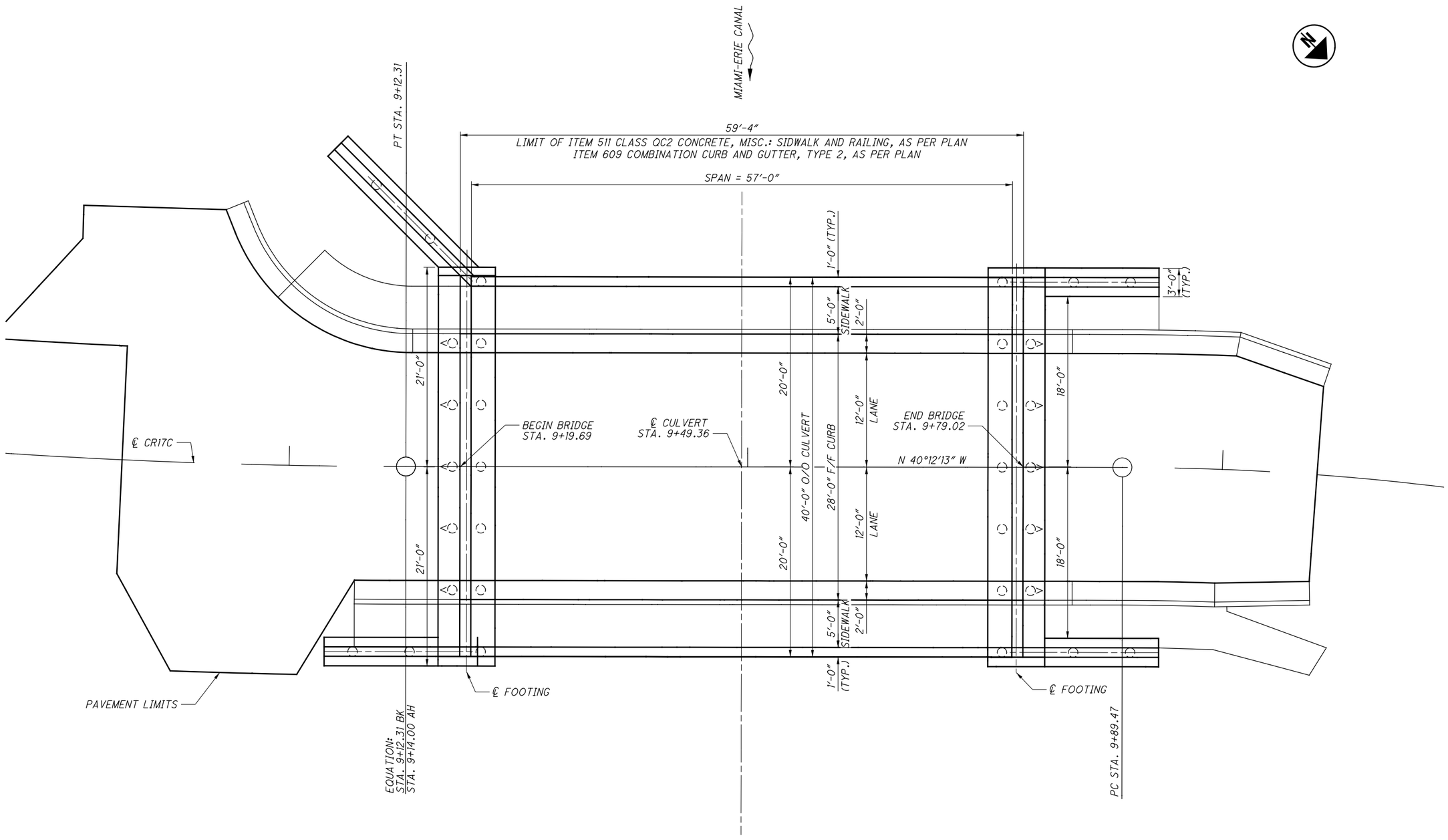

W:\Projects\Projects F-J\HENC0065\CAD\SHEETS\17C_0015CMD001.dgn 2/13/2015 3:34:18 PM dhess

Mannik Smith GROUP
1800 INDIAN WOOD CIRCLE
MAUMEE, OHIO 43537

DESIGNED	DRAWN	REVIEWED	DATE
BWP	DRH	RCH	10/14
CHECKED	REVISED	STRUCTURE FILE NUMBER	
TLR	----	TBD	

GENERAL PLAN
HEN-0017C-0015
CR17C OVER MIAMI & ERIE CANAL

HEN-0017C-0015

2 / 12

11 / 21

DESIGN SPECIFICATIONS

DESIGN SPECIFICATIONS: THIS STRUCTURE CONFORMS TO THE "LRFD BRIDGE DESIGN SPECIFICATIONS" ADOPTED BY THE AMERICAN ASSOCIATION OF STATE HIGHWAY AND TRANSPORTATION OFFICIALS, 6TH EDITION, 2012, INCLUDING THE 2013 INTERM SPECIFICATIONS AND THE ODOT BRIDGE DESIGN MANUAL 2007, EFFECTIVE 7/18/2014

DESIGN LOADING

HL93

FACTORED VERTICAL LOADS ON FOOTING:
DEAD= 37.375 KIP/FT
LIVE= 12.0785 KIP/FT

FACTORED HORIZONAL LOADS ON FOOTING:
DEAD= 26.5 KIP/FT
LIVE= 12.0785 KIP/FT

DESIGN DATA

THE FOLLOWING ASSUMPTIONS ARE USED FOR DESIGN:
CLASS "QC-Misc" - COMPRESSIVE STRENGTH 4000 PSI
UNIT WEIGHT OF CONCRETE = 150 PCF
UNIT WEIGHT OF SOIL AND BACKFILL = 135 PCF
INTERNAL ANGLE OF FRICTION OF BACKFILL (ϕ) = 30

REINFORCING STEEL:
ASTM A615 OR 1996 GRADE 60, MINIMUM YIELD STRENGTH 60,000 PSI

DECK PROTECTION METHOD

CORROSION INHIBITOR ADMIXTURE AND MEMBRANE WATERPROOFING

PRECAST CULVERT

ALL PRECAST CULVERT UNITS SHALL MEET THE REQUIREMENTS OF ITEMS 603 AND ASTM C1504 WHERE APPLICABLE

PILES DRIVEN TO BEDROCK

PILES TO BEDROCK: DRIVE PILES TO REFULSAL ON BEDROCK. THE DEPARTMENT WILL CONSIDER REFUSAL TO BE OBTAINED BY PENETRATING WEAK BEDROCK FOR SEVERAL INCHES TO A MINIMUM RESISTANCE OF 20 BLOWS PER INCH OR BY CONTACTING STRONG BEDROCK AND THE PILE RECEIVING AT LEAST 20 BLOWS. SELECT THE HAMMER SIZE TO ACHIEVE THE REQUIRED DEPTH TO BEDROCK AND REFUSAL. INSTEAD OF DRIVING TO REFUSAL, THE CONTRACTOR MAY PERFORM DYNAMIC LOAD TESTING ACCORDING TO CMS 523 TO ESTABLISH A DRIVING CRITERIA FOR EACH PILE TYPE AND CAPACITY. ESTABLISH THE DRIVING CRITERIA TO ACHIEVE AN ULTIMATE BEARING VALUE THAT IS 1.5 TIMES THE TOTAL FACTORED LOAD GIVEN BELOW FOR THE PILES. PAYMENT FOR DYNAMIC LOAD TESTING PERFORMED AT THE CONTRACTOR'S OPTION IS INCLUDED IN THE UNIT PRICE PAY ITEM FOR PILES DRIVEN.

THE TOTAL FACTORED LOAD IS 298.89 KIPS PER PILE FOR THE 32 ABUTMENT PILES.

ABUTMENT PILES:
32 PILES 30 FEET LONG, ORDER LENGTH

DEMOLITION DEBRIS

TAKE ALL NECESSARY PRECAUTIONS TO AVOID AND/OR LIMIT DEMOLITION DEBRIS FROM ENTERING THE STREAM. ANY MATERIAL THAT DOES FALL INTO THE STREAM SHALL BE REMOVED AS SOON AS POSSIBLE.

CAST-IN-PLACE FOOTING SURFACE FINISH REQUIREMENTS

THE SURFACE OF THE CONCRETE FOOTING SHALL NOT VARY MORE THAN 1/8" VERTICALLY FROM A 3' STRAIGHT EDGE, OR MORE THAN 1/2" IN SURFACE ELEVATION ACROSS THE ENTIRE FOOTING. ANY SURFACE IRREGULARITIES EXCEDDING 1/8" SHALL BE MORTARED AND CORRECTED PRIOR TO PLACING THE PRECAST UNITS AS DIRECTED BY THE ENGINEER.

UTILITY LINES

THE UTILITY(IES) SHALL BEAR ALL EXPENSE INVOLVING IN RELOCATING (INSTALLING) THE AFFECTED UTILITY LINES. THE CONTRACTOR AND UTILITY(IES) ARE TO COOPERATE BY ARRANGING THEIR WORK IN SUCH A MANNER THAT INCONVENIENCE TO EITHER WILL BE HELD TO A MINIMUM.

WATERPROOFING

TYPE 2 WATERPROOFING, PER CMS 512.08 AND 711.25, SHALL BE INSTALLED ON THE EXTERIOR TOP HORIZONTAL SURFACE AND EXTEND VERTICALLY DOWN THE ENTIRE SIDES OF THE PRECAST CULVERT SECTIONS FOR ALL PORTIONS OF THE CULVERT WHICH SHALL BE IN CONTACT WITH THE BACKFILL. PAYMENT FOR THE MEMBRANE WATERPROOFING SHALL BE AT THE CONTRACT PRICE BID PER SQUARE YARD FOR ITEM 512 - TYPE 2 WATERPROOFING

POROUS BACKFILL WITH FILTER FABRIC

POROUS BACKFILL SHALL BE PLACED BEHIND THE WINGWALLS ONLY AND SHALL EXTEND TO 12" BELOW THE EMBANKMENT SURFACE. GEOTEXTILE FABRIC SHALL BE PLACED BETWEEN THE POROUS BACKFILL AND REPLACED EXCAVATION ADJACENT TO THE STRUCTURE. THE FABRIC SHALL TURN UNDER THE BOTTOM OF THE POROUS BACKFILL AND RETURN 6" ABOVE THE TOP OF THE FOOTING.

ITEM 517, RAILING, MISC.: PEDESTRIAN HANDRAIL (BLACK)

THE FOLLOWING APPLIES TO ALL FENCE ITEMS:

CONSTRUCT A STEEL PEDESTRIAN HAND RAILING AS SHOWN ON SHEET 12/12 . FURNISH MATERIAL MEETINGTHE SPECIFICATION FOR WELDED AND SEAMLESS STEEL PIPE ASTM A 53 (STEEL) OR THE SPECIFICATIONS FOR ALUMINUM-ALLOY PIPE ASTM B 241 (ALUMINUM). THE RAILING MUST COMPLY WITH THE STRENGTH AND GEOMETRY REQUIREMENTS OF THE CURRENT AASHTO LRFD BRIDGE DESIGN SPECIFICIATIONS.

GALVANIZE ALL MATERIAL AFTER FABRICATION IN ACCORADANCE WITH ASTM A 123. SPLICES FOR STEEL RAILING SHALL BE FIELD WELDED. REPAIR AREAS ON WHICH THE COATING HAS BEEN DAMAGED IN THE FIELD AS APPROVED BY THE ENGINEER.

PRIOR TO GALVANIZING, ALL CORNERS OF THERMALLY CUT OR SHEARED EDGES SHALL HAVE A 1/16 INCH RADIUS OR EQUIVALENT FLAT SURFACE AT A SUITABLE ANGLE. VENT HOLES WHERE REQUIRED FOR GALVANIZING SHALL BE DETAILED BY THE FABRICATOR AND PLACED IN THE UNDERSIDE OF THE MEMBERS.

AFTER GALVANIZATION, ZINC HIGH SPOTS SUCH AS METAL DRIP LINE AND OTHERS THAT WOULD DETRACT FROM THE PAINT APPEARANCE SHALL BE MADE FLUSH WITH THE SURROUNDING SURFACE BY SSPC SP2 OR SP3. CARE SHALL BE TAKEN THAT THE BASE GALVANIZED COATING IS NOT REMOVED. REPAIRED AREAS SHALL BE CHECKED FOR REQUIRED COATING THICKNESS.

GALVANIZED COATINGS DAMAGED IN THE SHOP SHALL BE REPAIRED PER ASTM A780 METHOD A3. GALVANIZED COATINGS DAMAGED IN THE FIELD SHALL BE REPAIRED PER ASTM A780 METHOD A1.

AFTER REMOVING HIGH SPOTS THE GALVANIZED COATING SHALL BE CLEANED PER SSPC SP-1. THE CLEANING SOLUTION SHALL BE AN ALKALINE SOLUTION WITH A PH RANGING FROM A MINIMUM OF 11 TO A MAXIMUM OF 12. THIS SOLUTION CAN BE APPLIED BY IMMERSION, SPRAY OR SOFT NYLON BRUSH. FOLLOW CLEANING WITH A HOT WATER OR HOT PRESSURE WASHER RINSE. INDIVIDUAL PIECES SHALL BE SEPERATED AND POSITIONED TO FACILITATE DRAINAGE AND DRYING. THE PIECES SHALL BE COMPLETELY DRY BEFORE PROCEEDING.

AFTER CLEANING, THE PIECES SHALL BE ABRASIVE BLASTED PER SSPC-SP7 BRUSH-OFF BLAST CLEANING. THE BLASTING OPERATION SHALL ROUGHEN THE GALVANIZED SURFACE TO AN ANGULAR SURFACE PROFILE OF 0.25 TO 0.50 MILS. THE BLASTING EQUIPMENT, TECHNIQUE AND ABRASIVE MATERIAL SHALL BE SELECTED TO PROVIDE FOR THE SPECIFIED SURFACE PROFILE WITHOUT REMOVAL OF ZINC LAYERS. THE FINAL ZINC MILLAGE SHALL NOT BE LESS THAN 3.0 MILS. ALL ABRASIVE RESIDUE SHALL BE REMOVED WITH CLEAN COMPRESSED AIR OR OTHER METHODS ACCEPTABLE TO THE DEPARTMENT. FIELD CONNECTION AREAS SHALL HAVE A UNIFORM GALVANIZED COATING FREE OF LOCAL EXCESSIVE ROUGHNESS WHICH WOULD PREVENT THE FIELD CONNECTIONS FROM MAKING INTIMATE CONTACT.

ALL PARTS OF THE FENCE SHALL BE SHOP PAINTED AFTER GALVANIZING. AFTER OBTAINING AN ACCEPTABLE SURFACE PROFILE, SHOP APPLY A TWO COAT PAINT SYSTEM CONSISTING OF EPOXY INTERMEDIATE COAT AND A URETHANE FINISH COAT MEETING THE REQUIREMENTS OF CMS 513. THE FINISH COAT SHALL MATCH FEDERAL COLOR STANDARD NO. 27040 (BLACK).

THE EPOXY INTERMEDIATE COATING SHALL BE APPLIED WITHIN 24 HOURS OF THE BRUSH-OFF BLASTING. THE COATINGS SHALL BE APPLIED PER CMS 513 EXCEPT THAT REQUIREMENTS FOR SURFACE PREPARATION AND PRIMING SHALL NOT BE PERFORMED. THE COATING SHALL BE SHOP APPLIED AS SPECIFIED IN THESE NOTES. FIELD REPAIRS AND TOUCH UPS SHALL FOLLOW WORK LIMITATIONS SPECIFIED PER CMS 514 AND BE AS DIRECTED BY THE ENGINEER.

THE INSTALLED PEDESTRIAN HAND RAILING SHALL BE FREE OF BURRS OR SHARP PROJECTIONS. EXPOSED SURFACES OF ALL NUTS, BOLTS, AND ANCHOR BOLTS USED TO ASSEMBLE THE FENCE SHALL BE GALVANIZED AND FIELD PAINTED TO MATCH FENCE COMPONENTS.

FABRICATION AND INSTALLATION OF THE PEDESTRIAN HAND RAILING SHALL BE IN ACCORDANCE WITH THE APPLICABLE PROVISIONS OF ITEM 517. ALL LABOR, EQUIPMENT, MATERIALS, AND INCIDENTALS ASSOCIATED WITH THIS WORK ARE INCLUDED WITH ITEM 517, RAILING,MISC.: PEDESTRIAN HANDRAIL (BLACK).

Mannik Smith GROUP
1800 INDIAN WOOD CIRCLE
MAUMEE, OHIO 43537

DESIGNED	DRAWN	REVIEWED	DATE
BWP	DRH	RCH	10/14
CHECKED	REVISED	STRUCTURE FILE NUMBER	
TLR	----	TBD	

GENERAL NOTES
HEN-0017C-0015
CR17C OVER MIAMI & ERIE CANAL

HEN-0017C-0015

W:\Projects\Projects F-J\HEN0065\CAD\SHEETS\17C_0015CGN001.dgn 2/13/2015 3:34:18 PM dhess

BRIDGE CONSTRUCTION SEQUENCE

THIS PROJECT IS DESIGNED UTILIZING THE CONCEPTS OF ACCELERATED BRIDGE CONSTRUCTION (ABC) IN ORDER TO REDUCE THE ROAD CLOSURE TIME. SPECIFICALLY, THE PROJECT WILL UTILIZE PRECAST FOOTINGS WITH VOIDS TO BE FILLED WITH HIGH EARLY STRENGTH CONCRETE, PRECAST CULVERT SECTIONS, PRECAST WINGWALLS, PRECAST HEADWALLS, AND HIGH EARLY STRENGTH CONCRETE CURBS, SIDEWALKS AND PARAPETS. THE CONTRACTOR IS RESONSIBLE FOR THE MEANS AND METHODS OF CONSTRUCTION; HOWEVER THE SEQUENCE WILL BE GENERALLY AS FOLLOWS:

1. FABRICATE PRECAST SECTIONS (FOLLOWING APPROVAL OF SHOP PLANS)
2. CLOSE ROAD 17C
3. REMOVE EXISTING BRIDGE
4. EXCAVATE FOR NEW STRUCTURE
5. DRIVE PILES
6. SET PRECAST FOOTINGS (ALLOW FOR SPECIFIED DESIGN STRENGTH TO BE ATTAINED)
7. SET PRECAST CULVERT SECTIONS
8. SET PRECAST WINGWALLS
9. POUR FOOTING CONCRETE (FILL VOIDS)
10. INSTALL BACKFILL (PARTIAL)
11. SET PRECAST HEADWALLS
12. COMPLETE BACKFILL
13. INSTALL CURB AND GUTTER & ROADWAY
14. INSTALL SIDEWALKS/PARAPET/RAILING
15. OPEN ROAD 17C

THE TIMEFRAME FOR COMPLETION OF CONSTRUCTION WILL BE PER THE CONTRACT DOCUMENTS AND AS DETERMINED/APPROVED BY THE HENRY COUNTY ENGINEER.

ITEM 507 - 12" CAST IN PLACE REINFORCED CONCRETE PILES, AS PER PLAN

THIS ITEM INCLUDES THE PILES (LOCATED WITHIN THE PRECAST FOOTING VOIDS) TO BE DRIVEN TO SUPPORT THE PRECAST CULVERT SYSTEM. PILES ARE TO BE DRIVEN PER ITEM 507 WITH THE TOLERANCE MEETING THE CRITERIA FOR PILES PROJECTING ABOVE THE GROUND PER 507.10. THE TOLERANCE FOR PLACEMENT OF THE PILES IS WITHIN 3" OF THE LOCATION SHOWN ON THE PLANS. PILES WILL BE CONSIDERED DEFECTIVE IF THEY ARE OUT OF TOLERANCE AND/OR INTERFERE WITH PLACEMENT OF THE PRECAST FOOTING AND/OR REINFORCING STEEL. FINAL PILE LOCATIONS ARE AS APPROVED BY THE ENGINEER.

THIS ITEM SHALL BE AS PER ITEM 507 AND THE ABOVE, AND INCLUDES ALL NECESSARY EQUIPMENT, MATERIALS, LABOR, AND INCIDENTALS FOR COMPLETION.

ITEM 511 - CLASS QC1 CONCRETE WITH QC/QA, FOOTING, AS PER PLAN

THIS ITEM INCLUDES THE CONCRETE USED TO FILL THE PRECAST FOOTING VOIDS FOLLOWING THE SETTING OF THE PRECAST CULVERT SECTIONS AND WINGWALLS. THE INTENT IS FOR THE CONCRETE TO "LOCK IN" THE PRECAST SECTIONS. THE CONCRETE USED FOR THIS ITEM SHALL BE AS PER ITEM 511 WITH TYPE III CEMENT (HIGH EARLY STRENGTH) USED. DESIGN THE MIX TO ATTAIN 0.90 DESIGN STRENGTH WITHIN 7 DAYS. THE FOOTING/CULVERT STRUCTURE SHALL NOT BE BACKFILLED UNTIL THE 0.90 DESIGN STRENGTH HAS BEEN ATTAINED AS INDICATED BY CYLINDER TEST RESULTS.

ITEM 511 - CLASS QC2 CONCRETE, MISC.: SIDEWALK AND RAILING

THIS ITEM INCLUDES THE CONCRETE USED TO CONSTRUCT THE SIDEWALK AND RAILING. THE CONCRETE USED FOR THIS ITEM SHALL BE AS PER ITEM 511 WITH TYPE III CEMENT (HIGH EARLY STRENGTH) USED. DESIGN THE MIX TO ATTAIN 0.90 DESIGN STRENGTH WITHIN 7 DAYS. ROAD 17C SHALL NOT BE OPENED UNTIL THE 0.90 DESIGN STRENGTH HAS BEEN ATTAINED AS INDICATED BY CYLINDER TEST RESULTS.

THE RAILINGS (EACH FACE) WILL INCLUDE AESTHETIC FEATURES AS SHOWN IN THE PLANS CONSISTING OF ASHLAR STONE PATTERN AND RANDOM PATTERN STAINING.

THIS ITEM SHALL BE PER ITEM 511 AND THE ABOVE, AND INCLUDES ALL NECESSARY EQUIPMENT, MATERIALS, LABOR, AND INCIDENTALS FOR COMPLETION.

ITEM 602 - MASONRY MISC.: PRECAST REINFORCED CONCRETE FOOTING/PILE CAP

THIS ITEM INCLUDES DESIGNING, FURNISHING AND INSTALLING THE PRECAST REINFORCED CONCRETE FOOTINGS/PILE CAPS IN ACCORDANCE WITH THE DIMENSIONS AND ELEVATIONS SHOWN IN THE PLANS. THE FOOTING/PILE CAP WILL CONTAIN VOIDS FOR PLACEMENT OVER THE DRIVEN PILES PRIOR TO SETTING THE CULVERT SECTIONS, WINGWALLS, AND PLACEMEMT OF ITEM 511 CONCRETE.

THE FOOTING/PILE CAP SHALL BE DESIGNED BY THE CONTRACTOR TO SUPPORT THE DEAD AND LIVE LOAD WITH TRANSFER TO THE PILE FOUNDATIONS. INCLUDED WITH THIS ITEM WILL BE ALL NECESSARY REINFORCING STEEL DESIGNED TO ACCOMMODATE PILE EMBEDMENT INTO THE FOOTING UTILIZING SHOP PLACED AND/OR FIELD PLACED REINFORCING. THE FOOTING DESIGN LOADING WILL BE IN ACCORDANCE WITH THE CURRENT AASHTO LRFD CODE. THE CONCRETE SHALL BE "QC-MISC."- ALL MATERIAL SPECIFICATIONS SHALL MEET OR EXCEED THOSE LISTED IN THE DESIGN DATA NOTE SHOWN ON THE GENERAL NOTES INCLUDED HEREIN.

A SHOP DRAWING SUBMITTAL WILL BE REQUIRED AND IS INCLUDED WITH THIS ITEM (SEE NOTE HEREIN).

THIS ITEM SHALL BE AS PER ITEM 602 AND THE ABOVE, AND INCLUDES ALL NECESSARY EQUIPMENT, MATERIALS, LABOR, AND INCIDENTALS FOR COMPLETION.

ITEM 602 - MASONRY MISC.: PRECAST REINFORCED CONCRETE WINGWALL

THIS ITEM INCLUDES DESIGNING, FURNISHING AND INSTALLING THE REINFORCED CONCRETE WINGWALLS IN ACCORDANCE WITH THE DIMENSIONS AND ELEVATIONS SHOWN IN THE PLANS. THE WINGWALL SECTIONS THAT REST ON THE FOOTING WILL BE PLACED PRIOR TO PLACEMENT OF ITEM 511 CONCRETE IN THE FOOTING VOIDS.

THE WINGWALLS SHALL BE DESIGNED BY THE CONTRACTOR TO SUPPORT/RETAIN THE PROPOSED DEAD AND LIVE LOADS IN ACCORDANCE WITH THE CURRENT AASHTO LRFD CODE, SUPPORTED BY THE PRECAST FOOTINGS. THE PRECAST FOOTING DESIGN MAY NEED TO BE MODIFIED TO ACCOMMODATE THE PRECAST WINGWALL DESIGN.

INCLUDED WITH THIS ITEM SHALL BE THE 6" PIPE DRAINAGE SYSTEM WHICH OUTLETS THROUGH HOLES IN THE WINGWALLS. ALSO INCLUDED WITH THIS ITEM SHALL BE ALL CONNECTIONS, PLATES, PREFORMED EXPANSION JOINT FILLER (PEJF), DRAINAGE CONNECTIONS, AND JOINT SEALER. THE JOINT SEALER SHALL BE TYPE 2 WATERPROOFING PER ITEM 511 OR AN APPROVED EQUAL. PLACE JOINT SEALER CENTERED ON VERTICAL JOINTS, TWO (2) FT. WIDE, EXTENDING FULL HEIGHT OF WALL. THE WINGWALLS WILL INCLUDE AESTHETIC FEATURES AS SHOWN IN THE PLANS CONSISTING OF ASHLAR STONE PATTERN AND RANDOM PATTERN STAINING.

A SHOP DRAWING SUBMITTAL WILL BE REQUIRED AND IS INCLUDED WITH THIS ITEM (SEE NOTE HEREIN).

PAYMENT FOR THIS ITEM SHALL BE MADE PER SQUARE FOOT OF AREA OF THE OUTER WINGWALL FACE CALCULATED FROM PLAN DIMENSIONS. THIS ITEM SHALL BE PER ITEM 602 AND THE ABOVE, AND INCLUDES ALL NECESSARY EQUIPMENT, MATERIALS, LABOR, AND INCIDENTALS FOR COMPLETION.

ITEM 602 - MASONRY MISC.: PRECAST REINFORCED CONCRETE HEADWALL

THIS ITEM INCLUDES DESIGNING, FURNISHING AND INSTALLING THE REINFORCED CONCRETE HEADWALLS IN ACCORDANCE WITH THE DIMENSIONS AND ELEVATIONS SHOWN IN THE PLANS.

THE HEADWALLS SHALL BE DESIGNED BY THE CONTRACTOR TO SUPPORT/RETAIN THE PROPOSED DEAD AND LIVE LOADS IN ACCORDANCE WITH THE CURRENT AASHTO LRFD CODE.

INCLUDED WITH THIS ITEM SHALL BE ALL CONNECTIONS, PLATES, PREFORMED EXPANSION JOINT FILLER (PEJF), DRAINAGE CONNECTIONS, AND JOINT SEALER. THE JOINT SEALER SHALL BE TYPE 2 WATERPROOFING PER ITEM 511 OR AN APPROVED EQUAL. PLACE JOINT SEALER CENTERED ON VERTICAL JOINTS, TWO (2) FT. WIDE, EXTENDING FULL HEIGHT OF WALL. THE HEADWALLS WILL INCLUDE AESTHETIC FEATURES AS SHOWN IN THE PLANS CONSISTING OF ASHLAR STONE PATTERN AND RANDOM PATTERN STAINING.

A SHOP DRAWING SUBMITTAL WILL BE REQUIRED AND IS INCLUDED WITH THIS ITEM (SEE NOTE HEREIN).

PAYMENT FOR THIS ITEM SHALL BE MADE PER SQUARE FOOT OF AREA OF THE OUTER HEADWALL FACE CALCULATED FROM PLAN DIMENSIONS. THIS ITEM SHALL BE PER ITEM 602 AND THE ABOVE, AND INCLUDES ALL NECESSARY EQUIPMENT, MATERIALS, LABOR, AND INCIDENTALS FOR COMPLETION.

ITEM 609 - COMBINATION CURB AND GUTTER, TYPE 2, AS PER PLAN

THIS ITEM INCLUDES THE CONCRETE USED TO CONSTRUCT THE CURB AND GUTTER IN ACCORDANCE WITH THE DIMENSIONS SHOWN IN THE PLANS. THE CONCRETE USED FOR THIS ITEM SHALL BE AS PER ITEM 609 WITH TYPE III CEMENT (HIGH EARLY STRENGTH) USED. DESIGN THE MIX TO ATTAIN 0.90 DESIGN STRENGTH WITHIN 7 DAYS.

THIS ITEM SHALL BE PER ITEM 511 AND THE ABOVE, AND INCLUDES ALL NECESSARY EQUIPMENT, MATERIALS, LABOR, AND INCIDENTALS FOR COMPLETION.

ITEM 611 - CONDUIT, MISC.: TYPE A PRECAST REINFORCED CONCRETE BRIDGE CULVERT SECTIONS, (57'-0" SPAN X 10'-8" RISE)

THIS ITEM INCLUDES DESIGNING, FURNISHING AND INSTALLING THE REINFORCED BRIDGE CULVERT SECTIONS IN ACCORDANCE WITH THE DIMENSIONS AND ELEVATIONS SHOWN IN THE PLANS. THE CULVERT SECTIONS SHALL BE IN CLOSE CONFORMITY TO THE SHAPE SHOWN IN THE PLANS AS DETERMINED BY THE ENGINEER. THE CULVERT SECTIONS WILL BE PLACED PRIOR TO PLACEMENT OF ITEM 511 CONCRETE IN THE FOOTING VOIDS.

THE CULVERT SECTIONS SHALL BE DESIGNED BY THE CONTRACTOR TO SUPPORT THE DEAD AND LIVE LOAD IN ACCORDANCE WITH THE CURRENT AASHTO LRFD CODE, SUPPORTED BY THE PRECAST FOOTING. THE CULVERT SECTIONS WILL INCLUDE AESTHETIC FEATURES AS SHOWN IN THE PLANS CONSISTING OF KEYSTONE AND RUSTICATION OF FASCIAS WITH RANDOM PATTERN STAINING.

A SHOP DRAWING SUBMITTAL WILL BE REQUIRED AND IS INCLUDED WITH THIS ITEM (SEE NOTE HEREIN).

THIS ITEM SHALL BE AS PER ITEM 602 AND THE ABOVE, AND INCLUDES ALL NECESSARY EQUIPMENT, MATERIALS, LABOR, AND INCIDENTALS FOR COMPLETION

SHOP DRAWING SUBMITTAL

PREPARE SHOP DRAWINGS FOR THE FOLLOWING ITEMS:

ITEM 602 - MASONRY, MISC.: PRECAST REINFORCED CONCRETE FOOTING/PILE CAP
ITEM 602 - MASONRY, MISC.: PRECAST REINFROCED CONCRETE WINGWALL
ITEM 602 - MASONRY, MISC.: PRECAST REINFORCED CONCRETE HEADWALL
ITEM 611 - CONDUIT, MISC.: TYPE A REINFORCED CONCRETE BRIDGE CULVERT SECTIONS, (57'-0" SPAN X 10'-8" RISE)

PREPARE AND SUBMIT THE SHOP DRAWINGS FOR THE ABOVE ITEMS AS A SINGLE CULVERT SYSTEM PACKAGE. THE PACKAGE WILL INCLUDE THE PLANS SHOWING ALL DIMENSIONS, REINFORCING, ELEVATIONS, DESIGN AND MATERIAL SPECIFICATIONS, CONNECTION DETAILS, DRAINAGE DETAILS, MODIFICATIONS TO PROPOSED FOOTINGS, DEAD AND LIVE LOADS ON THE FOOTINGS, AND INSTALLATION PROCEDURES. INCLUDED WITH THE PACKAGE WILL BE A LOAD RATING FOR THE CULVERT SYSTEM.

HAVE A REGISTERED ENGINEER IN RESPONSIBLE CHARGE DESIGN, PREPARE, SIGN, SEAL, AND DATE THE PACKAGE (LIST AS DESIGNER). HAVE ANOTHER REGISTERED ENGINEER CHECK THE PACKAGE AND SIGN, SEAL, AND DATE THE PACKAGE (LIST AS CHECKER). SUBMIT TWO (2) HARD COPIES AND ONE (1) ELECTRONIC PDF OF THE PACKAGE TO THE HENRY COUNTY ENGINEER 30 DAYS PRIOR TO SCHEDULED CULVERT CONSTRUCTION. THE CULVERT SYSTEM PACKAGE MUST BE APPROVED BY THE HENRY COUNTY ENGINEER PRIOR TO FURNISHING AND INSTALLING THE STRUCTURE.

PAYMENT FOR THE SHOP PLANS IS INCLUDED WITHT ITEMS REQUIRING SHOP DRAWINGS AS LISTED ABOVE.

Mannik Smith GROUP
1800 INDIAN WOOD CIRCLE
MAUMEE, OHIO 43537

DESIGNED	DRAWN	REVIEWED	DATE
BWP	DRH	RCH	10/14
CHECKED	REVISED	STRUCTURE FILE NUMBER	
TLR	----	TBD	

ABC GENERAL NOTES
HEN-0017C-0015
CR17C OVER MIAMI & ERIE CANAL

HEN-0017C-0015

W:\Projects\Projects F-J\HENC0065\CAD\SHEETS\17C_0015CGN002.dgn 2/13/2015 3:34:19 PM dhess

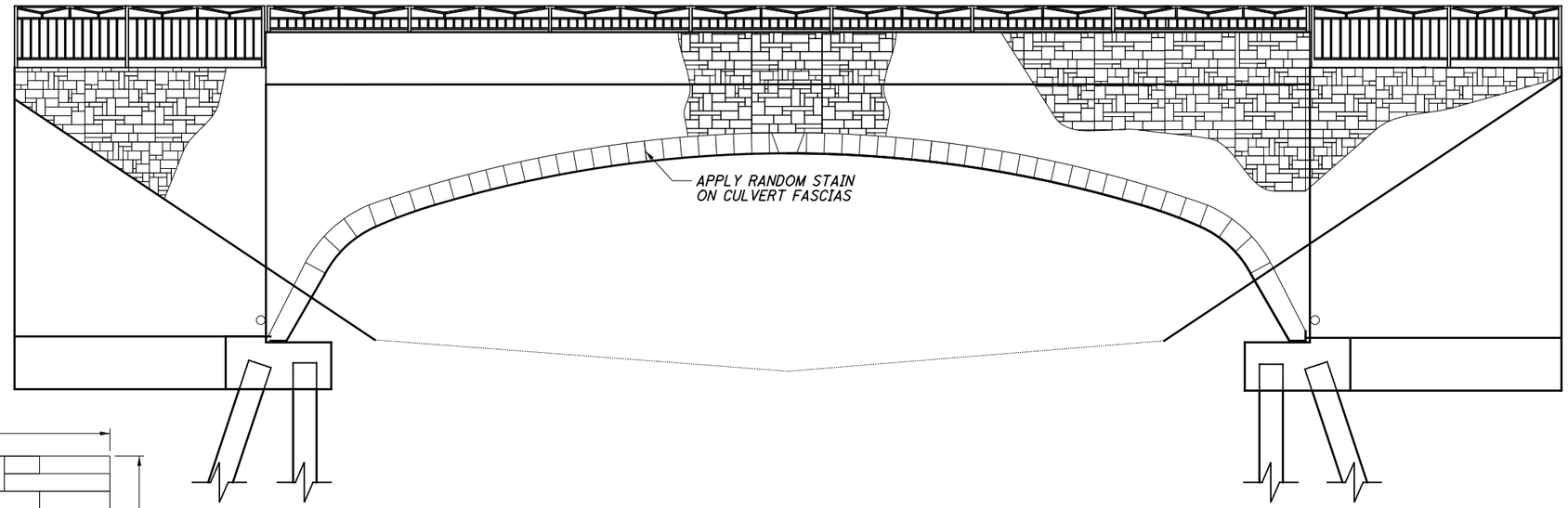

GENERAL ELEVATION

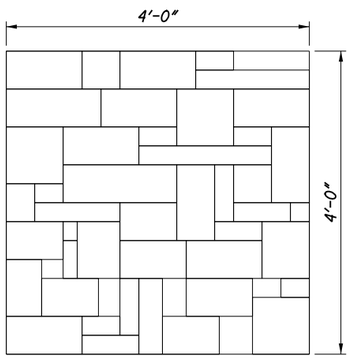

EXAMPLE PANEL

RELIEF: 1½"
COURSE HEIGHT: VARIES
STONE WIDTH: VARIES

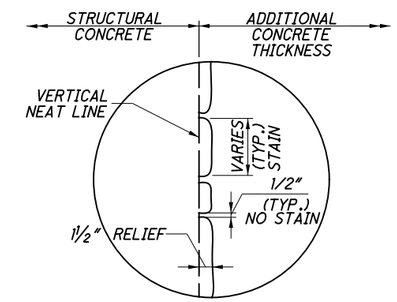

FACING DETAIL

(TYPICAL ALL DETAILS)

ARCHITECTURAL CONCRETE FORMWORK

DESCRIPTION: ASHLER STONE (#1502) CONCRETE FORMS SHALL BE USED ON THE FRONT FACE OF THE HEADWALLS AND WINGWALLS. THE FORMS CONSTRUCTED SHALL MEET THE DETAILS SHOWN ON THIS SHEET. THE CONTRACTOR SHALL SUBMIT SHOP DRAWINGS DETAILING THE PATTERNS IN ACCORDANCE WITH 501.04 FOR APPROVAL PRIOR TO PLACING ANY CONCRETE WHERE CUSTOM FORMWORK WILL BE USED. SHOP DRAWINGS SHALL INCLUDE FORMWORK INSTALLATION AND CASTING INSTRUCTIONS, INDICATE FORM BACKUP, REVEAL, AND CHAMFER STRIP LOCATIONS. AT THE CONTRACTOR'S OPTION AND EXPENSE, A FORMLINER MANUFACTURER MAY BE ENGAGED TO SUPPLY A FORMLINER IN LIEU OF CUSTOM FORMWORK. IF THIS OPTION IS EXERCISED, THE CONTRACTOR SHALL COORDINATE WITH THE MANUFACTURER.

TO ASSURE UNDERSTANDING OF FORMLINER USE, TEST PANEL MOCK-UP REQUIREMENTS, AND FINAL CONSTRUCTION PROCEDURES.

MATERIALS: CUSTOM FORMWORK OR FORMLINERS SHALL BE FABRICATED WITH SHAPES THAT ALLOW REMOVAL OF THE FORMS WITHOUT DAMAGE OR VISUAL IMPAIRMENT OF THE CONCRETE, SHALL HAVE ⅛" MINIMUM RAIL WITH NO SHARP EDGES, AND SHALL BE CAPABLE OF WITHSTANDING APPLIED CONCRETE POUR PRESSURES WITHOUT LEAKAGE, PHYSICAL DEFECT, OR VISUAL IMPAIRMENT.

CONSTRUCTION REQUIREMENTS: DAMAGED FORMS/FORMLINERS WHOSE CONTINUED USE OR REPAIR WOULD NEGATIVELY IMPACT THE AESTHETICS OF THE FINISHED CONCRETE SHALL BE REPLACED. FORM/FORMLINER JOINTS SHALL BE SEALED TO PREVENT CEMENT PASTE FROM BLEEDING AND INSTALLED IN ACCORDANCE WITH THE APPROVED SHOP DRAWINGS. CHAMFERED CORNERS SHALL FORM SMOOTH, SOLID, UNBROKEN CONTINUOUS SURFACES WHICH ARE UNIFORMLY STRAIGHT.

A PRE-CONSTRUCTION TEST PANEL SHALL BE CONSTRUCTED BY THE CONTRACTOR FOR APPROVAL BY THE ENGINEER. IF THE TEST PANEL DOES NOT MEET THE ENGINEER'S APPROVAL, THE PROPOSED CUSTOM FORMWORK/FORMLINER MAY BE REJECTED. THE TEST PANEL MUST BE APPROVED BEFORE PLACING ANY CONCRETE WHERE CUSTOM FORMWORK/FORMLINERS WILL BE USED. REJECTION OF THE TEST PANEL WILL REQUIRE CONSTRUCTION OF SUBSEQUENT TEST PANELS UNTIL APPROVAL IS GRANTED. THE SIZE OF THE TEST PANEL SHALL BE 3'-6" HIGH BY AT LEAST 7'-0" LONG. THE MINIMUM TEST PANEL THICKNESS SHALL BE 9". THE TEST PANEL SHALL USE ACTUAL PROJECT SPECIFIC MATERIALS, METHODS, AND WORKMANSHIP, INCLUDING CONCRETE MIX (CEMENT TYPE, AGGREGATE GRADATION, SLUMP, WATER/CEMENT RATIO, PLASTICIZERS, AND ADDITIVES), FORM RELEASE AGENTS, PLACEMENT RATE, FORM PRESSURES, JOINTS SEALING, VIBRATING, AND STRIPPING PRACTICES. ANY INTENDED PATCHING OR REPAIR PROCEDURES FOR THE CORRECTIONS OF MINOR DEFECTS THAT DO NOT RESULT IN REJECTION OF THE ENTIRE PANEL SHALL BE DEMONSTRATED ON THE TEST PANEL. THE ACCEPTED TEST PANEL SHALL BE THE STANDARD BY WHICH TECHNICAL AND AESTHETIC MERIT. THE TEST PANEL SHALL BE CONSTRUCTED AT THE PROJECTS SITE, OR AT AN ALTERNATE LOCATION AGREED UPON BY THE ENGINEER. UPON COMPLETION OF THE FINAL CONSTRUCTION, THE CONTRACTOR SHALL BE RESPONSIBLE FOR REMOVAL AND DISPOSAL OF THE TEST PANEL MOCK-UP

BASIS OF PAYMENT: THE ARCHITECTURAL FORMWORK/FORMLINER WILL BE INCLUDED WITH THE APPROPRIATE CONCRETE ITEMS FOR PAYMENT. THE WORK SHALL INCLUDE FABRICATION AND ERECTION OF THE FORMWORK, PREPARATION OF FORMWORK SHOP DRAWINGS, CONSTRUCTION AND REMOVAL OF THE PRE- CONSTRUCTION TEST PANEL, LABOR, MATERIALS, EQUIPMENT, AND INCIDENTALS REQUIRED TO COMPLETE THIS ITEM. SEALING OF CONCRETE SURFACES WILL BE PAID FOR SEPARATELY, UNDER ITEM 512.

AESTHETIC CONCRETE COLORING

FURNISH CONCRETE ITEMS FOR THE FOLLOWING:
- ITEM 611 - CONDUIT, MISC.: TYPE A, PRECAST REINFORCED CONCRETE BRIDGE CULVERT SECTIONS (57'-0" SPAN X 10'-8" RISE)
- ITEM 602 - MASONRY, MISC.: PRECAST REINFORCED CONCRETE WINGWALL
- ITEM 602 - MASONRY, MISC.: PRECAST REINFORCED CONCRETE HEADWALL

ACCORDING TO ITEM 611 WITH THE FOLLOWING MODIFICATIONS:

THE SIMULATED ASHLAR STONE PORTIONS OF THE ARCHITECTURAL FINISH SHALL BE STAINED USING A RANDOM PATTERN PER STONE BLOCK, WHILE THE SMOOTHED FINISHED PORTIONS (SIMULATED MORTAR JOINTS) OF THE ARCHITECTURAL FINISH SHALL NOT BE STAINED. STAIN SHALL BE ACID-BASED, CONTAINING WETTING AGENTS AND HIGH GRADE UV-STABLE METALLIC SALTS THAT REACT WITH CALCIUM VARIEGATED COLOR EFFECTS. STAIN SHALL BE COMPATIBLE WITH FORM RELEASE AGENTS, CONCRETE COLOR ADMIXTURES, AND NON-EPOXY SEALER.

THE COLORS TO BE USED ARE FEDERAL FS 30117 (EARTH RED), FS 30117 (EARTH RED), FS 30266 (YELLOW SAND), & FS 30372 (SAND) OR APPROVED BY THE ENGINEER.

UTILIZE THE ENGINEER APPROVED CONCRETE TEST PANEL PREVIOUSLY CONSTRUCTED FOR THE PATTERN DESIGN TO APPLY THE PROPOSED STAIN (COLORANT) SCHEME INCLUDING THE NON-EPOXY SEALER. THE STAIN SHALL BE APPLIED PER THE MANUFACTURER SPECIFICATIONS AT A CONSISTENT CURING AGE WITH THE APPLICATION TO BE APPLIED IN THE FIELD. THE STAINED TEST PANEL SHALL BE APPROVED BY THE ENGINEER PRIOR TO APPLICATION IN THE FIELD

OBTAIN COLORED CONCRETE PRODUCTS AND EACH TYPE OF CEMENTITIOUS MATERIAL OF THE SAME BRAND FROM THE SAME MANUFACTURER'S PLANT. OBTAIN EACH AGGREGATE FROM SINGLE SOURCE. COLOR SHALL BE CONSISTENT WITHIN THE SAME POUR AND FROM ONE POUR TO THE NEXT.

COLOR SHALL MATCH THE FEDERAL STANDARD COLORS CALLED OUT ON THE PLAN. SUBMIT MANUFACTURER'S COLOR SAMPLES FOR ENGINEER REVIEW.

SEAL THE EXPOSED CONCRTE SURFACES AS SHOWN IN THE PLANS WITH A CLEAR NON-EPOXY SEALER PER CMS 512. IN ADDITION TO AIR DRYING CONCRETE SURFACES FOR AT LEAST TEN (10) DAYS AFTER THE COMPLETION OF REQUIRED CONCRETE CURING, FOLLOW CONCRETE STAIN MANUFACTURER'S RECOMMENDATIONS FOR ANY ADDITIONAL CURING NEEDS BOTH PRIOR TO STAIN APPLICATION AND SEALER APPLICATION.

INCLUDE THE COST OF CONCRETE STAIN WITH THESE ITEMS FOR PAYMENT.

ALL MATERIAL, LABOR AND INCIDENTALS FOR THE ABOVE ARE INCLUDED WITH THE ABOVE ITEMS FOR PAYMENT

Mannik Smith GROUP
1800 INDIAN WOOD CIRCLE
MAUMEE, OHIO 43537

DESIGNED	DRAWN	REVIEWED	DATE
BWP	DRH	RCH	10/14
CHECKED	REVISED	STRUCTURE FILE NUMBER	
TLR		TBD	

AESTHETIC DETAILS
HEN-0017C-0015
CRITC OVER MIAMI & ERIE CANAL

HEN-0017C-0015

W:\Projects\Projects F-J\HEN0065\CAD\SHEETS\17C_0015CMD005.dgn 2/13/2015 3:34:20 PM

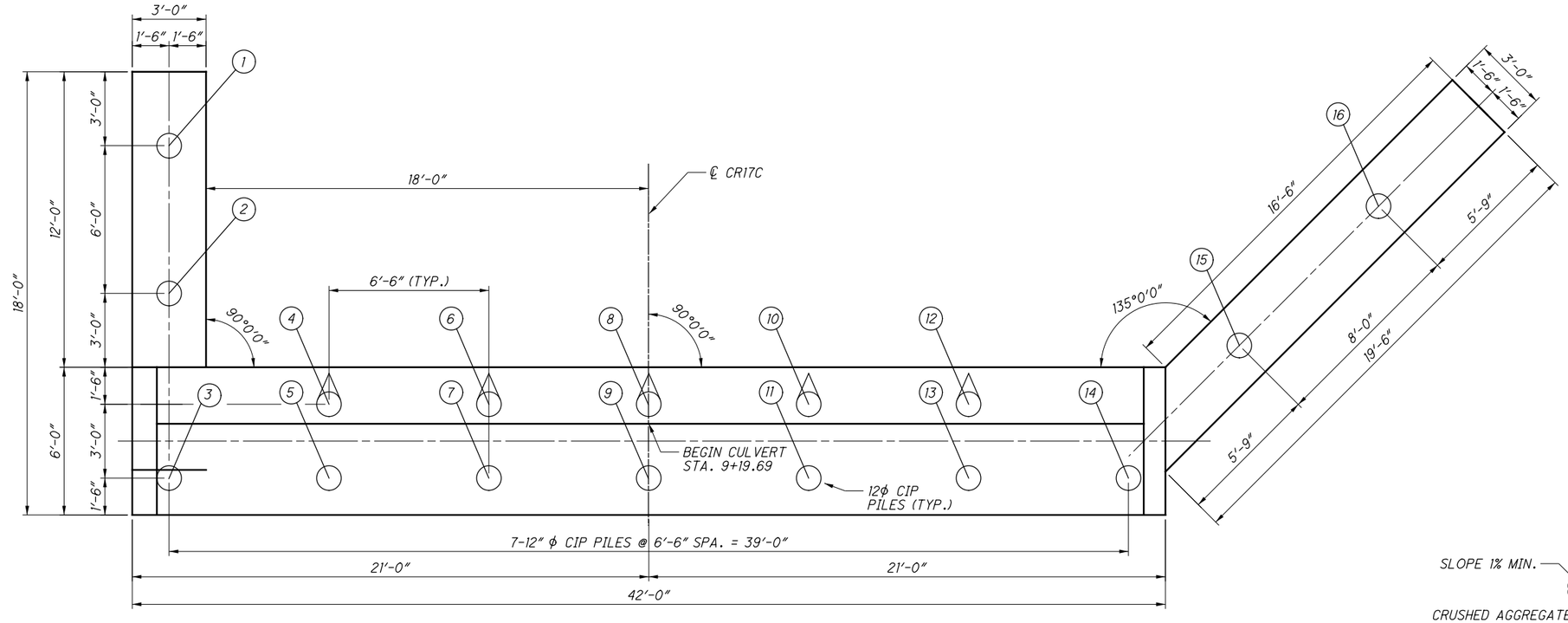

PILE LAYOUT

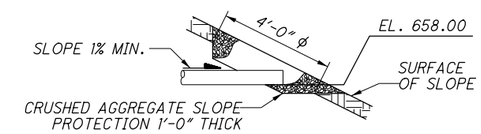

OUTLET DETAIL

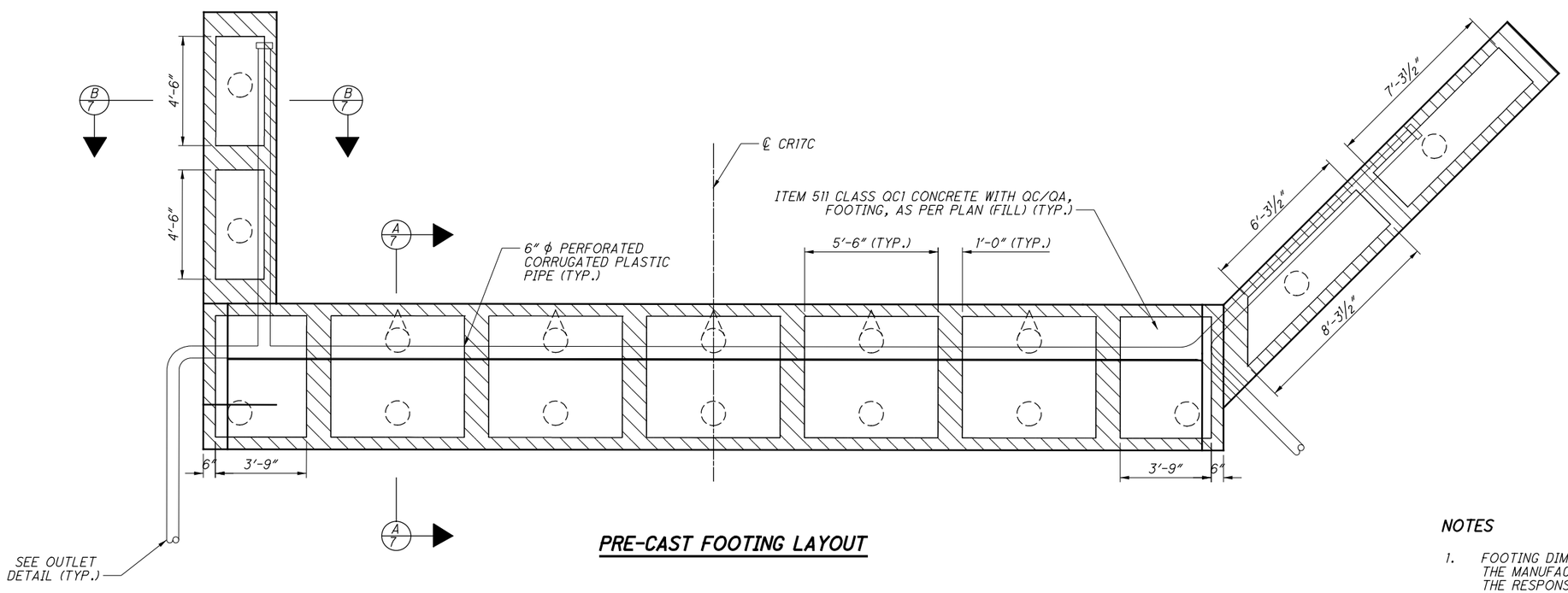

PRE-CAST FOOTING LAYOUT

NOTES

1. FOOTING DIMENSIONS MAY BE MODIFIED TO ACCOMADATE THE MANUFACTURER'S ANCHORING SYSTEMS. IT SHALL BE THE RESPONSIBILITY OF THE CONTRACTOR TO COORDINATE WITH THE MANUFACTURER ON ANY REQUIRED CHANGES. PAYMENT FOR THE MODIFICATIONS SHALL BE AT THE CONTRACT BID PRICE PER SQUARE YARD FOR ITEM 602 - MASONRY MISC.; PRECAST REINFORCED CONCRETE WINGWALL.

Mannik Smith GROUP
1800 INDIAN WOOD CIRCLE
MAUMEE, OHIO 43537

DESIGNED	DRAWN	REVIEWED	DATE
NMS	DRH	RCH	10/14
CHECKED	REVISED	STRUCTURE FILE NUMBER	
TLR	----	TBD	

REAR ABUTMENT FOUNDATION AND REINFORCING PLAN

HEN-0017C-0015
CR17C OVER MIAMI & ERIE CANAL

HEN-0017C-0015

W:\Projects\Projects F-J\HENC0065\CAD\SHEETS\17C_0015CFP001.dgn 2/13/2015 3:34:22 PM dhess

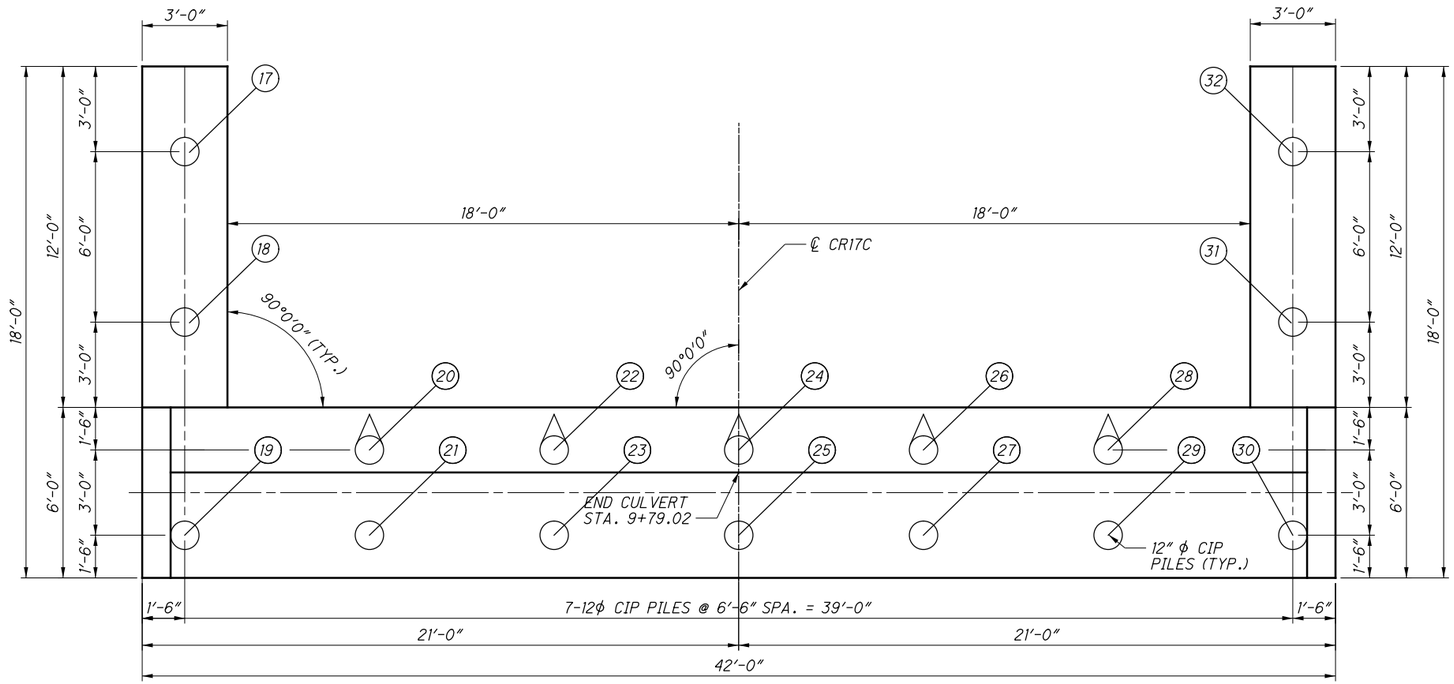

PILE LAYOUT

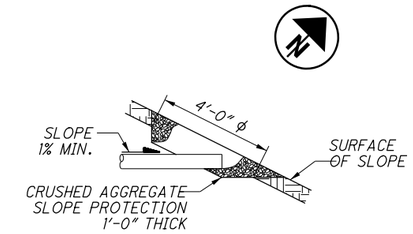

OUTLET DETAIL

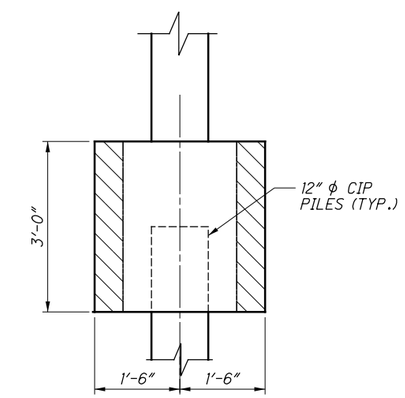

SECTION B-B

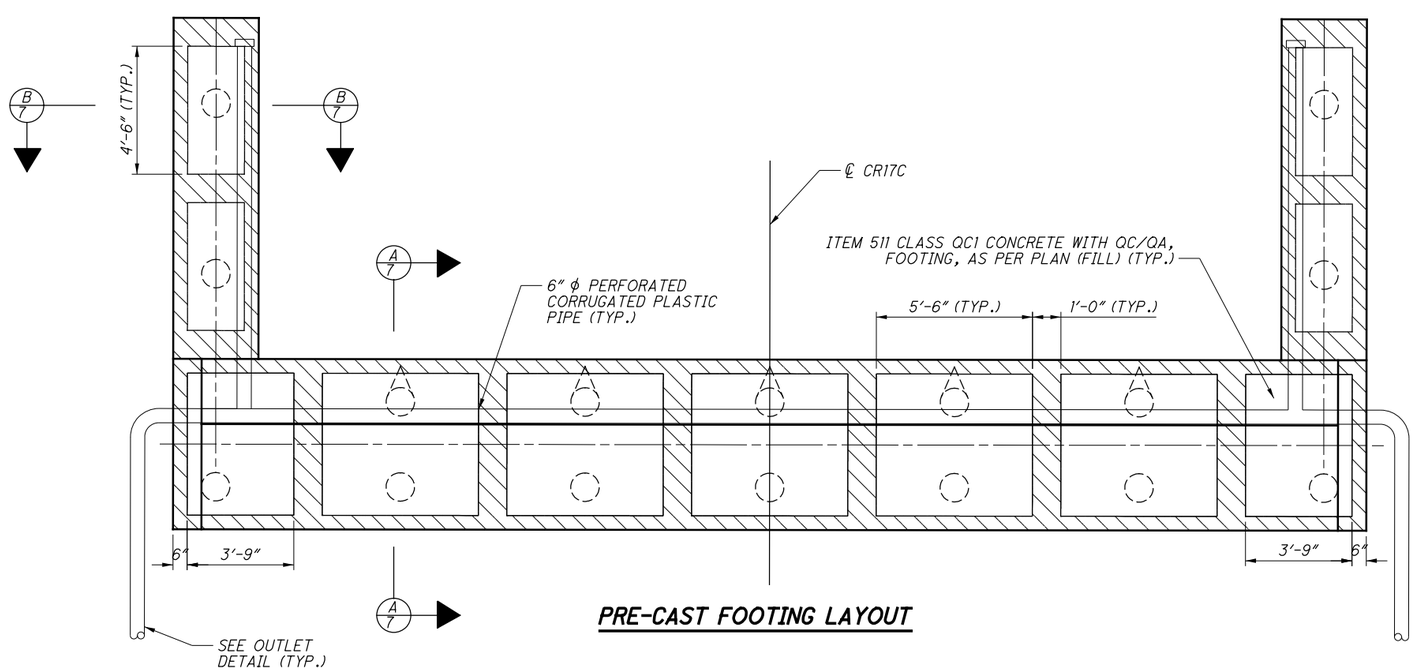

PRE-CAST FOOTING LAYOUT

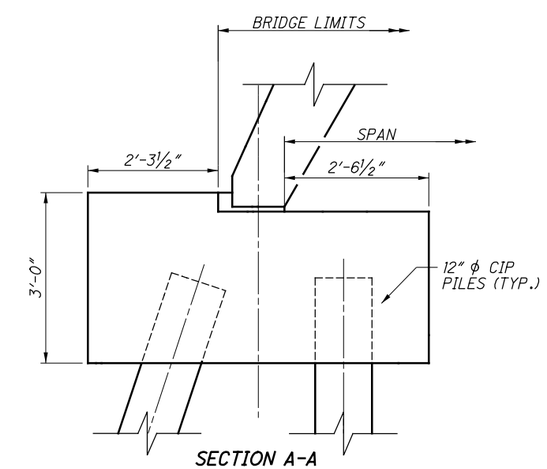

SECTION A-A

NOTES

1. FOOTING DIMENSIONS MAY BE MODIFIED TO ACCOMADATE THE MANUFACTURER'S ANCHORING SYSTEMS. IT SHALL BE THE RESPONSIBILITY OF THE CONTRACTOR TO COORDINATE WITH THE MANUFACTURER ON ANY REQUIRED CHANGES. PAYMENT FOR THE MODIFICATIONS SHALL BE AT THE CONTRACT BID PRICE PER SQUARE YARD FOR ITEM 602 - MASONRY MISC.; PRECAST REINFORCED CONCRETE WINGWALL.

Mannik Smith GROUP
1800 INDIAN WOOD CIRCLE
MAUMEE, OHIO 43537

DESIGNED	DRAWN	REVIEWED	DATE
NMS	DRH	RCH	10/14
CHECKED	REVISED	STRUCTURE FILE NUMBER	
TLR	----	TBD	

FORWARD ABUTMENT FOUNDATION AND REINFORCING PLAN
HEN-0017C-0015
CR17C OVER MIAMI & ERIE CANAL

HEN-0017C-0015

W:\Projects\Projects F-J\HENC0065\CAD\SHEETS\17C_0015CFP002.dgn 2/13/2015 3:34:23 PM dhess

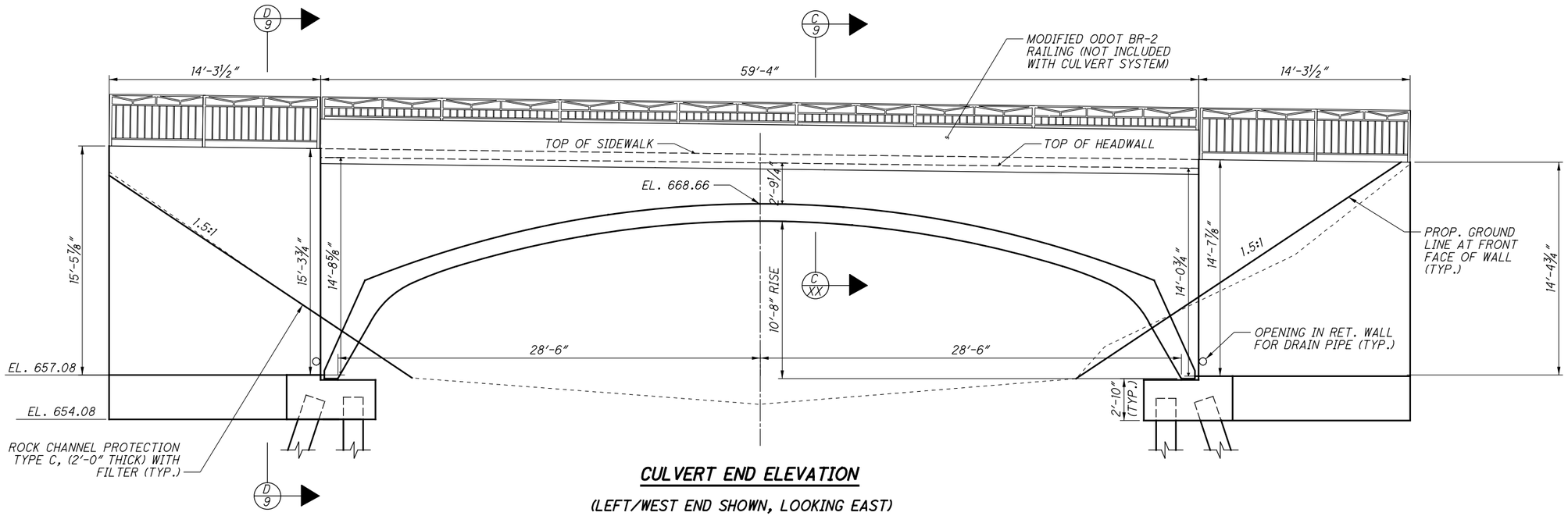

CULVERT END ELEVATION

(LEFT/WEST END SHOWN, LOOKING EAST)

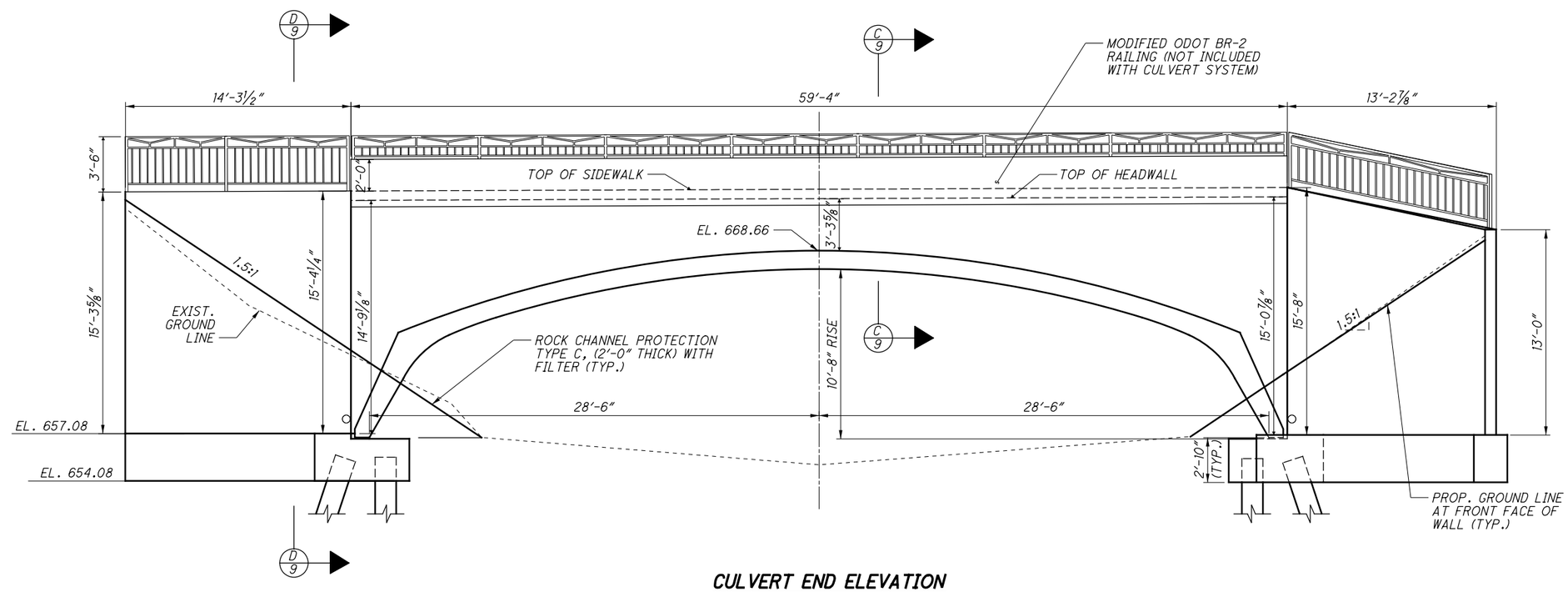

CULVERT END ELEVATION

(RIGHT/EAST END SHOWN, LOOKING WEST)

Mannik Smith GROUP
1800 INDIAN WOOD CIRCLE
MAUMEE, OHIO 43537

DESIGNED	DRAWN	REVIEWED	DATE
BWP	DRH	RCH	10/14
CHECKED	REVISED	STRUCTURE FILE NUMBER	
TLR	----	TBD	

CULVERT ELEVATIONS

HEN-0017C-0015

CR17C OVER MIAMI & ERIE CANAL

HEN-0017C-0015

W:\Projects\Projects F-J\HENC0065\CAD\SHEETS\17C_0015CMD002.dgn 2/13/2015 3:34:23 PM dhess

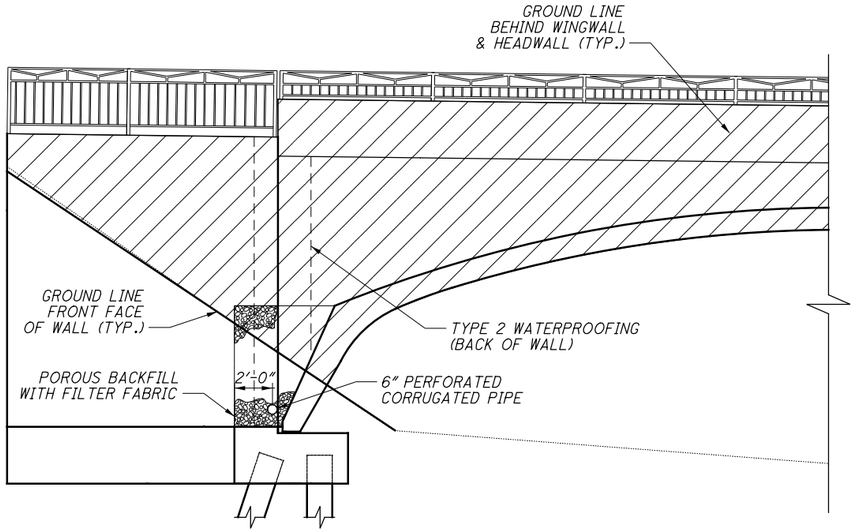

CONCRETE SEALING DETAIL

- LIMITS OF CONCRETE SEALING (NON-EPOXY) ON FRONT FACE OF WALL

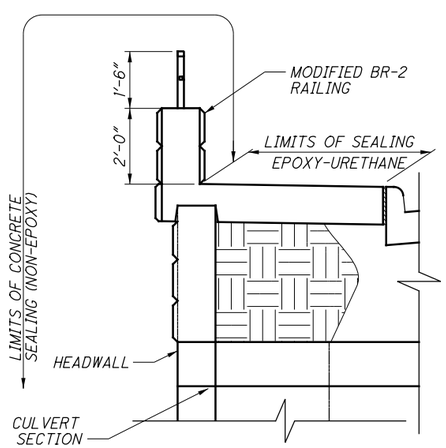

SECTION C-C

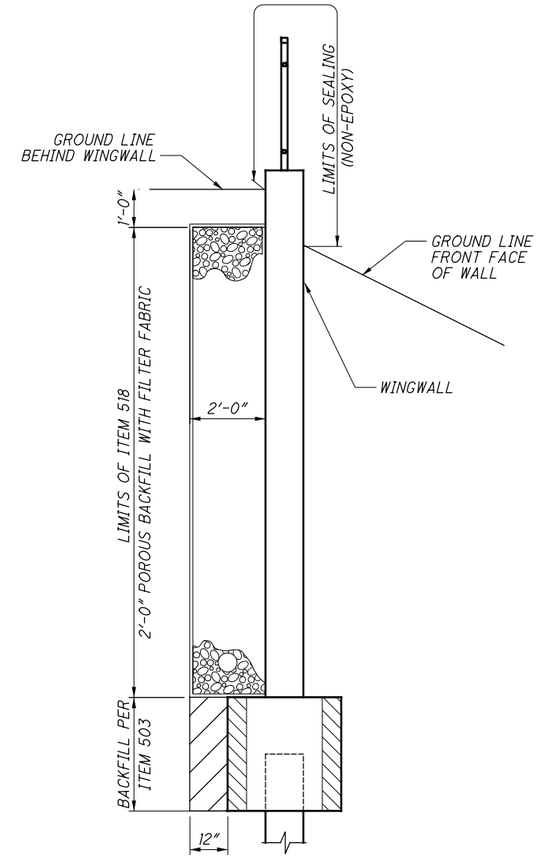

SECTION D-D

NOTES

1. EXTEND TYPE 2 WATERPROOFING 1'-6" PAST WINGWALL/ CULVERT JOINT.
2. SEE NOTE ON SHEET 2/12 FOR ADDITIONAL REQUIREMENTS ON PRE-APPROVAL AND SUBMITTAL OF DRAWINGS FOR PRECAST UNITS.
3. CULVERT LENGTH INCLUDES FIT-UP. MANUFACTURER SHALL DETERMINE THE ACTUAL PRECAST CULVERT SECTION LENGTH TO ACHIEVE THE REQUIRED CULVERT LENGTH.

Mannik Smith GROUP
1800 INDIAN WOOD CIRCLE
MAUMEE, OHIO 43537

DESIGNED	DRAWN	REVIEWED	DATE
BWP	DRH	RCH	10/14
CHECKED	REVISED	STRUCTURE FILE NUMBER	
TLR	----	TBD	

CULVERT ELEVATION AND DETAILS
HEN-0017C-0015
CR17C OVER MIAMI & ERIE CANAL

HEN-0017C-0015

W:\Projects\Projects F-J\HENC0065\CAD\SHEETS\17C_0015CMD004.dgn 2/13/2015 3:34:24 PM dhess

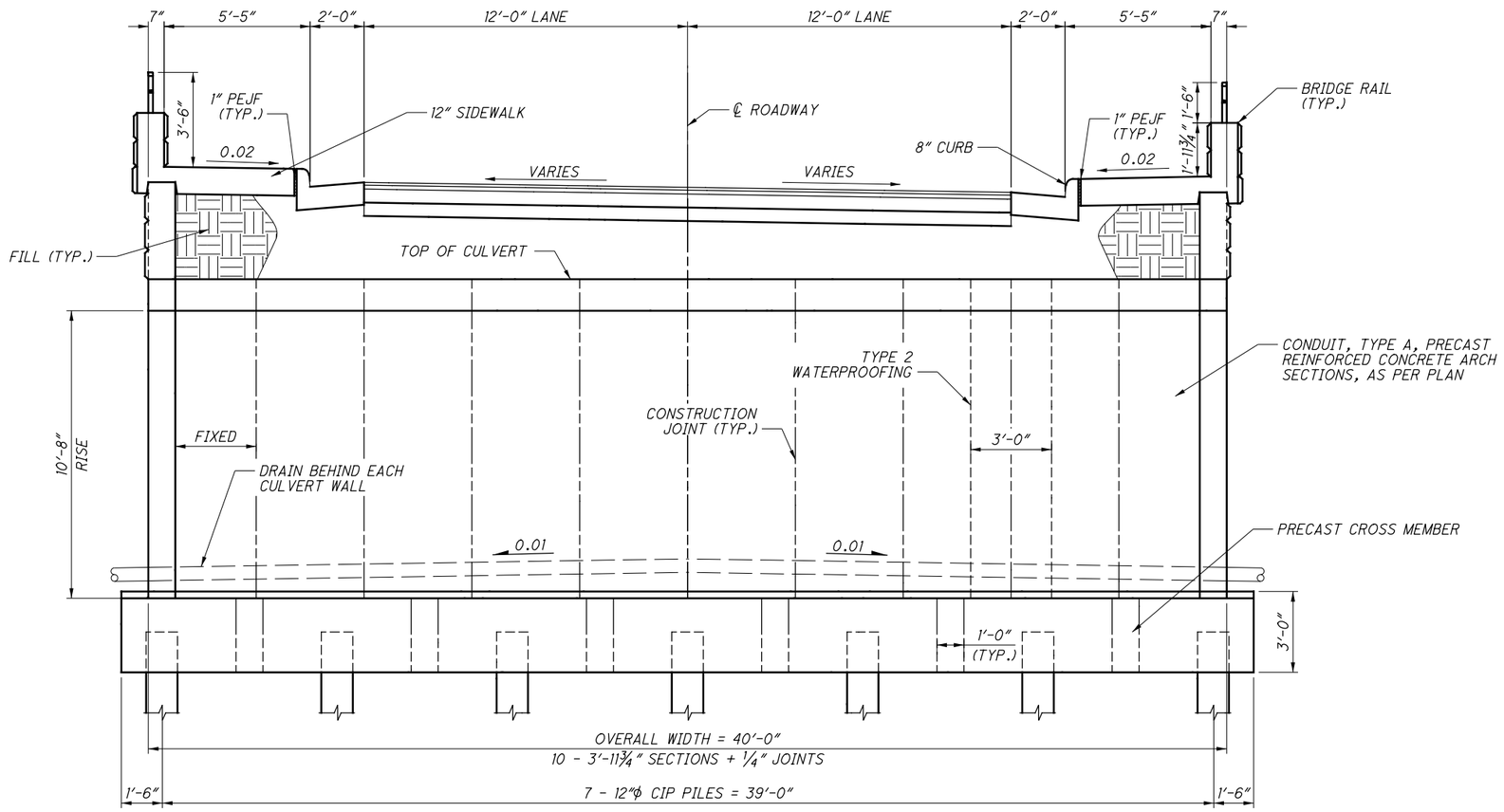

HENRY COUNTY ROAD 17C
PROPOSED TYPICAL SECTION
ALONG ℄ OF CULVERT

W:\Projects\Projects F-J\HENC0065\CAD\SHEETS\17C_0015CTS001.dgn 2/13/2015 3:34:25 PM dhess

Mannik Smith GROUP
9800 INDIAN WOOD CIRCLE
MAUMEE, OHIO 43537

DESIGNED	DRAWN	REVIEWED	DATE
NMS	DRH	RCH	10/14
CHECKED	REVISED	STRUCTURE FILE NUMBER	
TLR	----	TBD	

TRANSVERSE SECTION
HEN-0017C-0015
CR17C OVER MIAMI & ERIE CANAL

HEN-0017C-0015

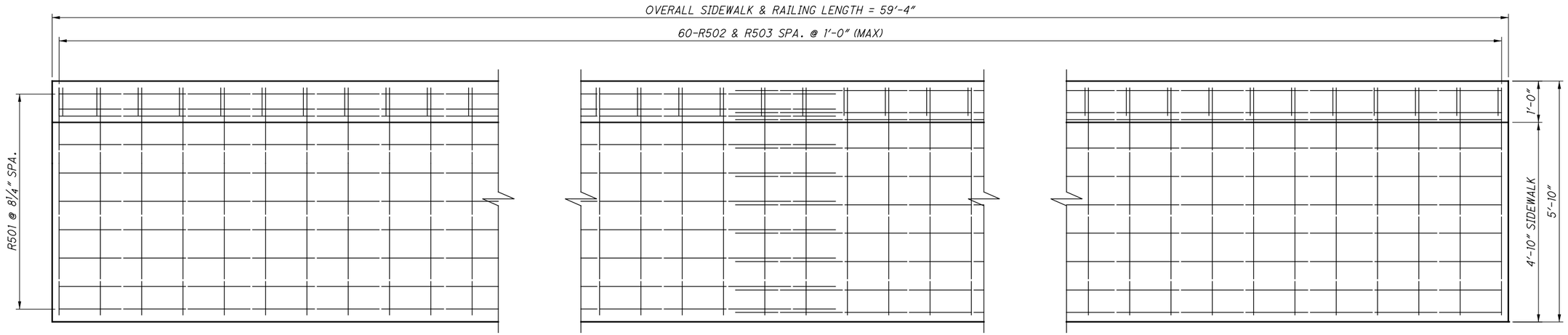

RAILING PLAN VIEW

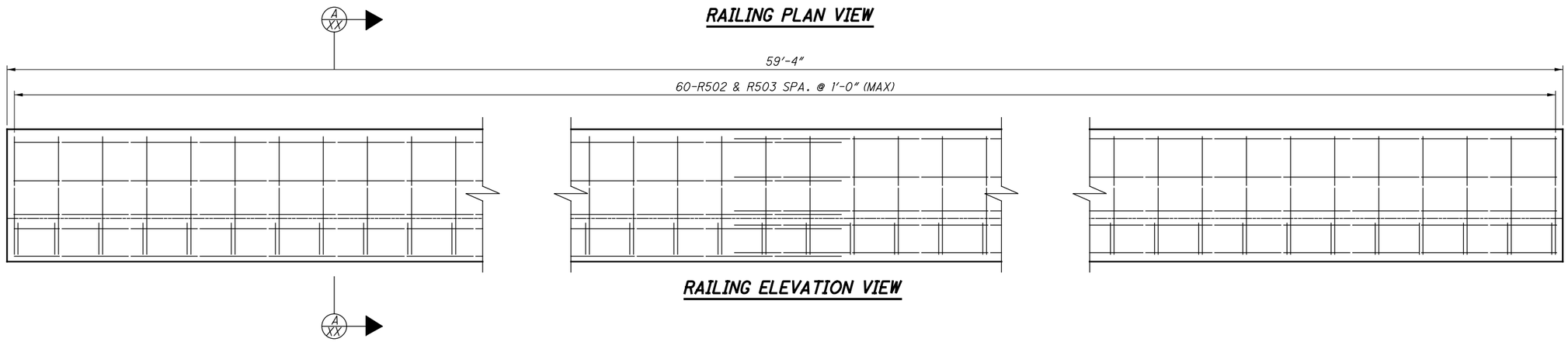

RAILING ELEVATION VIEW

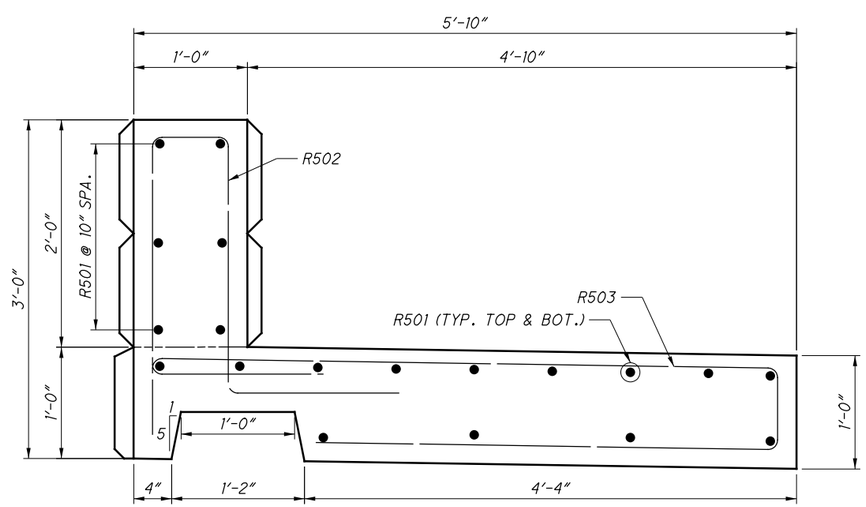

SECTION A-A

NOTES

1. REINFORCING LAP LENGTHS SHALL BE UNLESS OTHERWISE NOTED:
   #5 BARS - 2'-5"

Mannik Smith GROUP
1800 INDIAN WOOD CIRCLE
MAUMEE, OHIO 43537

DESIGNED	DRAWN	REVIEWED	DATE
BWP	DRH	RCH	10/14
CHECKED	REVISED	STRUCTURE FILE NUMBER	
TLR		TBD	

RAILING DETAILS
HEN-0017C-0015
CR17C OVER MIAMI & ERIE CANAL

HEN-0017C-0015

W:\Projects\Projects F-J\HEN0065\CAD\SHEETS\17C_0015CMD006.dgn 2/13/2015 3:34:26 PM dhess

ESTIMATED QUANTITIES

ITEM	EXTENSION	TOTAL	UNIT	DESCRIPTION	SHEET #
202	11002	LUMP		STRUCTURE REMOVED, OVER 20' SPAN	
202	22900	156	SQ YD	APPROACH SLAB REMOVED	
202	23500	187	SQ YD	WEARING COURSE REMOVED	
503	11100	LUMP		COFFERDAMS AND EXCAVATION BRACING	
503	21100	396	CU YD	UNCLASSIFIED EXCAVATION	
505	11100	LUMP		PILE DRIVING EQUIPMENT MOBILIZATION	
507	00501	800	FT	12" CAST IN PLACE REINFORCED CONCRETE PILES, DRIVEN, AS PER PLAN	4
507	00550	960	FT	12" CAST IN PLACE REINFORCED CONCRETE PILES, FURNISHED	
509	10000	4739	POUND	EPOXY COATED REINFORCING STEEL	
511	46513	74	CU YD	CLASS QC1 CONCRETE WITH QC/QA, FOOTING, AS PER PLAN	4
511	53012	35	CU YD	CLASS QC2 CONCRETE, MISC.: SIDEWALK AND RAILING	4
512	33001	296	SQ YD	TYPE 2 WATERPROOFING, AS PER PLAN	3
512	10051	213	SQ YD	SEALING OF CONCRETE SURFACES (NON-EPOXY), AS PER PLAN	5
517	76300	63	FT	RAILING MISC;, FULL HEIGHT PEDESTRIAN HANDRAIL	
517	76300	119	FT	RAILING MISC;, SHORTENED PEDESTRIAN HANDRAIL	
518	21200	99	CU YD	POROUS BACKFILL WITH FILTER FABRIC	
601	32204	31	CU YD	ROCK CHANNEL PROTECTION, TYPE C WITH FABRIC FILTER	
602	97000	933	SQ FT	MASONRY, MISC.: PRECAST REINFORCED CONCRETE WINGWALL	4
602	97000	644	SQ FT	MASONRY, MISC.: PRECAST REINFORCED CONCRETE HEADWALL	4
602	98000	1	LUMP	MASONRY, MISC.: PRECAST REINFORCED CONCRETE FOOTING/PILE CAP	4
609	12001	119	FT	COMBINATION CURB AND GUTTER, TYPE 2, AS PER PLAN	4
611	97300	1	LUMP	CONDUIT, MISC.: TYPE A PRECAST REINF. CONC. BRIDGE CULVERT SECTIONS, 57'-0" SPAN X 10'-8" RISE	4

MARK	TOTAL	LENGTH	WEIGHT	TYPE	DIMENSIONS						
					A	B	C	D	E	R	INC
RAILING/SIDEWALK											
R501	76	30'-9"	2434	STR	·	·	·	·	·		
R502	120	7'-6"	939	30	1'-6"	0'-8"	2'-3"	2'-1"			
R503	120	10'-11"	1366	36	0'-8"	0'-1"	5'-6"	4'-0"			
·	SUB-TOTAL		4739								

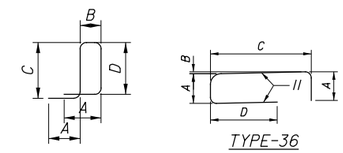

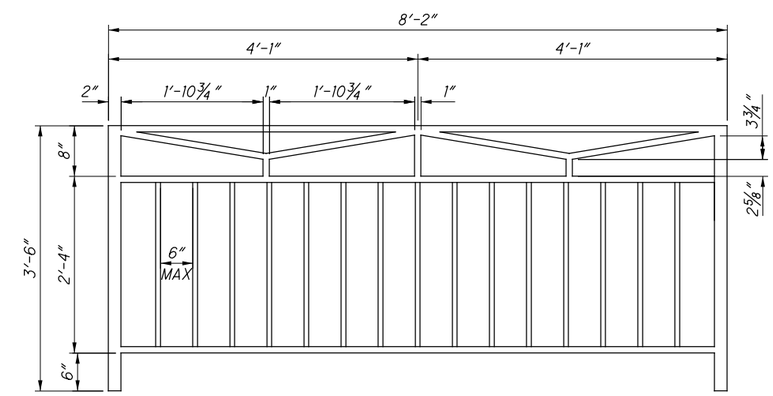

FULL HEIGHT PEDESTRIAN RAILING DETAIL

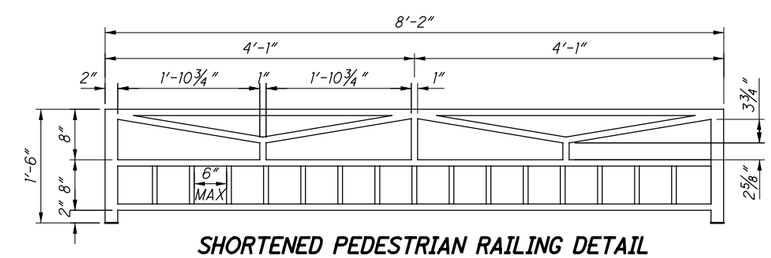

SHORTENED PEDESTRIAN RAILING DETAIL

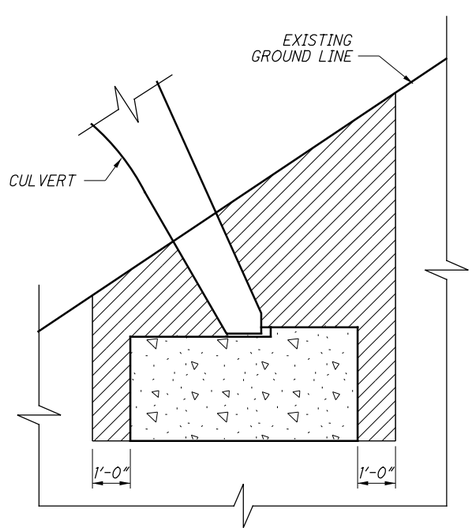

LIMITS OF UNCLASSIFIED EXCAVATION

CULVERT FOOTING

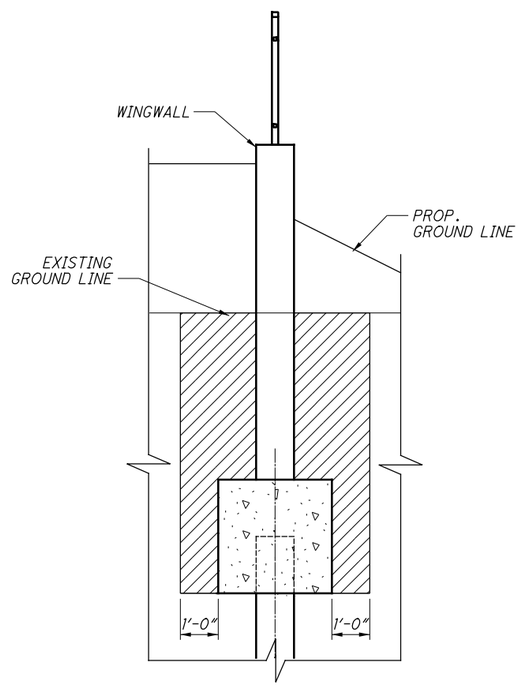

LIMITS OF UNCLASSIFIED EXCAVATION

WINGWALL FOOTING

NOTES

1. STRUCTURAL BACKFILL SHALL BE INCLUDED IN THE PAYMENT FOR ITEM 603 - PRECAST REINFORCED CONCRETE ARCH SECTION.
2. ADDITIONAL QUANTITIES WILL NOT BE PAID FOR BY THE DEPARTMENT DUE OVER-EXCAVATION BEYOND THE LIMITS SHOWN.

Mannik Smith GROUP
1800 INDIAN WOOD CIRCLE
MAUMEE, OHIO 43537

DESIGNED	DRAWN	REVIEWED	DATE
NMS	DRH	RCH	10/14
CHECKED	REVISED	STRUCTURE FILE NUMBER	
TLR	----	TBD	

MISCELLANEOUS DETAIL AND REINFORCING LIST

HEN-0017C-0015
CR17C OVER MIAMI & ERIE CANAL

HEN-0017C-0015

W:\Projects\Projects F-J\HENC0065\CAD\SHEETS\17C_0015CMD003.dgn 2/13/2015 3:34:27 PM dhess