SPECIFICATIONS
FOR
PRESTRESSED CONCRETE BOX BEAMS

TO

THE BOARD OF COUNTY COMMISSIONERS
HENRY COUNTY, OHIO

FOR
THE HENRY COUNTY HIGHWAY DEPARTMENT

BIDS WILL BE RECEIVED – APRIL 1, 2014
10:00 A.M.

LEGAL NOTICE

Notice is hereby given that sealed bids will be received at the Office of the Board of County Commissioners of Henry County, Ohio, 1853 Oakwood Avenue, Napoleon, Ohio until Tuesday, April 1, 2014 at 10:00 A.M., at which time and place, bids will be opened and read for the furnishing of:

Eight (8) each B21" x 48" x 46' Prestressed Concrete Box Beams

with all appurtenances for use by the Henry County Highway Department.

Bids shall include supplying all washers, nuts, flats, plates, studs, bolts, and any other accessories as required for the transverse tie rods and connecting guardrail posts to the bridge. It shall also include jute for shear keys and transverse tie rods all in accordance with the Ohio Department of Transportation Specifications.

All material shall be in accordance with the details and specifications for the same which are on file at the Office of the Henry County Engineer. They will also be available on the Henry County Engineer's website www.henrycountyengineer.com under the link "Bid Request Listing".

Bids must be submitted on the forms provided by the Engineer.

Bids may be hand delivered or mailed in a sealed envelope bearing the Bidder's name and address and marked "Sealed Bid for Prestressed Concrete Box Beams".

The said Board reserves the right to reject any or all bids.

The contract will be award to the lowest and best bidder.

No bid will be considered unless it be accompanied by a bond executed by a surety company authorized to do business in the State of Ohio or a certified check on a solvent bank; either in the amount of five (5%) percent of the bid to guarantee that if said bid is accepted, a contract will be entered into and the performance of it properly secured.

BY ORDER OF
BOARD OF COUNTY COMMISSIONERS
HENRY COUNTY, OHIO

By: Cathy Behnfeldt, Acting Clerk

Please advertise:

March 11, 2014

SCOPE

The Henry County Highway Department will be replacing a bridge on C.R. G between C.R. 8 and S.R. 109. County forces will be constructing the abutments and installing the prestressed concrete box beams with the fabrication and transportation of the beams and beam accessories being provided by the winning bidder.

REQUIREMENTS / SPECIFICATIONS

Beam fabrication and transportation shall conform to the State of Ohio, Department of Transportation Specification 515 (Prestressed Concrete Bridge Members), ODOT standard bridge drawing PSBD-2-07, the attached drawings, and any referenced drawings.

The fabricator shall temporarily supply a lifting sling or cables for a crane to use to lift the prestressed concrete box beams.

Anchor bolts/studs for guardrail posts shall be installed by the fabricator in accordance with the attached drawings and ODOT standard drawing DBR-2-73. All washers, nuts, flats, plates, studs, bolts, and any other accessories as required to connect guardrail posts to the bridge shall be supplied by the fabricator.

The fabricator shall supply transverse tie rods. All washers, nuts, flats, plates, and any other accessories as required for the installation of the transverse tie rods shall be supplied by the fabricator.

The fabricator shall supply jute for use in the shear keys.

The fabricator shall apply an epoxy-urethane sealer on the exposed ends of the outside beams and at least 1 foot in from the outside edge on the bottom of the outside beams in accordance with ODOT spec 512. The sealer tint shall be federal standard color number 17778.

The structure does not utilize anchor dowel or elastomeric bearing pads.

Installation of the beams and accessories will be performed by county forces.

Bid price shall include delivery to the project site.

PROOF OF INSURANCE

Vendors are required to furnish the County with a certificate of insurance in the minimum amount of $1,000,000.00 primary and $1,000,000.00 umbrella coverage. The County, its elected office and employees shall be named as additional insured with respect to all activities under any agreement resulting from this bidding. The certificate of insurance shall provide that such insurance shall not be cancelled without thirty (30) days prior written notice to the County. Vendors will replace certificate for any insurance expiring prior to the effective end date under any agreement resulting from this bidding.

WORKER'S COMPENSATION

Vendors shall maintain Worker's Compensation coverage as required by Ohio law. A copy of a valid Worker's Compensation certificate shall be submitted with the bid.

INDEMNIFICATION/HOLD HARMLESS

The vendor shall indemnify and hold harmless the County, its agents and employees from any and all losses, claims, damages, lawsuits, costs, judgments, expenses or any other liabilities which they may incur as a result of bodily injury, sickness, disease or death, or injury to or destruction of tangible property including the loss of use resulting therefrom, caused in whole or part by the negligent act or omission of the vendor or any person directly or indirectly employed by any of them or any person for whose acts any of them may be liable.

VERIFICATION OF "NO FINDING FOR RECOVERY"

No political subdivision shall award a contract for goods, services, or construction to a person against whom a Finding for Recovery has been issued by the Auditor of State, if the Finding for Recovery is unresolved.

The undersigned, by their signature and title, document that no "Finding for Recovery" is outstanding for the bidder.

_____

By:

_____

Title

Prior to award of a contract, Henry County shall verify and report to the Engineer and the Bidder that the Bidder does not appear in the State Auditor's database for "Findings of Recovery".

AFFIDAVIT IN COMPLIANCE WITH SECTION 3517.13 OF THE OHIO REVISED CODE

STATE OF OHIO

HENRY COUNTY

The undersigned personally appeared before me, as an individual or as a representative of

_____for a contract for_____
(Name of Entity) (Type of Product or Service)

to be let by the County of Henry, who, being duly cautioned and sworn, makes the following statement with respect to prohibited activities constituting a conflict of interest or other violations under Ohio Revised Code Section 3517.13, and further states that the undersigned has the authority to make the following representation on behalf of himself or herself or of the business entity:

1. That none of ***the*** following has **individually** made since April 4, 2007 and that, if awarded a contract for the purchase of goods or services in excess of $10,000, none of the following **individually** will make, beginning on the date the contract is awarded and extending until one year following the conclusion of the contract, as an individual, one or more campaign contributions totaling in excess of $10,000, to any elected official of the County of Henry or their individual campaign committees:

    a. Myself;
    b. Any partner or owner or shareholder of the partnership (if applicable);
    c. Any owner of more than 20% of the corporation or business trust (if applicable);
    d. Each spouse of any person identified in (a) through (c) of this section;
    e. Each child seven years of age to seventeen years of age of any person identified in divisions (a) through (c) of this section (only applicable to contributions made on or after April 4, 2007)

2. That none of the following have **collectively** made since April 4, 2007, and that, if awarded a contract for the purchase of goods or services in excess of $10,000, none of the following **collectively** will make, beginning on the date the contract is awarded and extending until one year following the conclusion of the contract, one or more campaign contributions totaling in excess of $10,000, to any elected official of the County of Henry or their individual campaign committees:

    a. Myself;
    b. Any partner or owner or shareholder of the partnership (if applicable);
    c. Any owner of more than 20% of the corporation or business trust (if applicable);
    d. Each spouse of any person identified in (a) through (c) of this section;
    e. Each child seven years of age to seventeen years of age of any person identified in divisions (a) through (c) of this section (only applicable to contributions made on or after April 4, 2007)

Signature_____

Title_____

Sworn to before me and subscribed in my presence this _____day of_____, 20_____.

Notary Public_____

My Commission expires_____

PROPOSAL

Description	**Total Price**
Eight (8) B21 x 48 Prestressed Concrete Box Beams and accessories	$ _____

Accompanying this bid must be a bid bond executed by a Surety Company authorized to do business in the State of Ohio or a certified check on a solvent bank; either in the amount of 5% of the bid to guarantee that if said bid is accepted, a contract will be entered into and the performance of it properly secured.

The Board of County Commissioners reserves the right to reject any and all bids.

Date:_____

FIRM NAME:_____

By:_____

Title:_____

Address:_____

_____

Telephone Number: _____

Fax Number:_____

Email:_____

Attachments

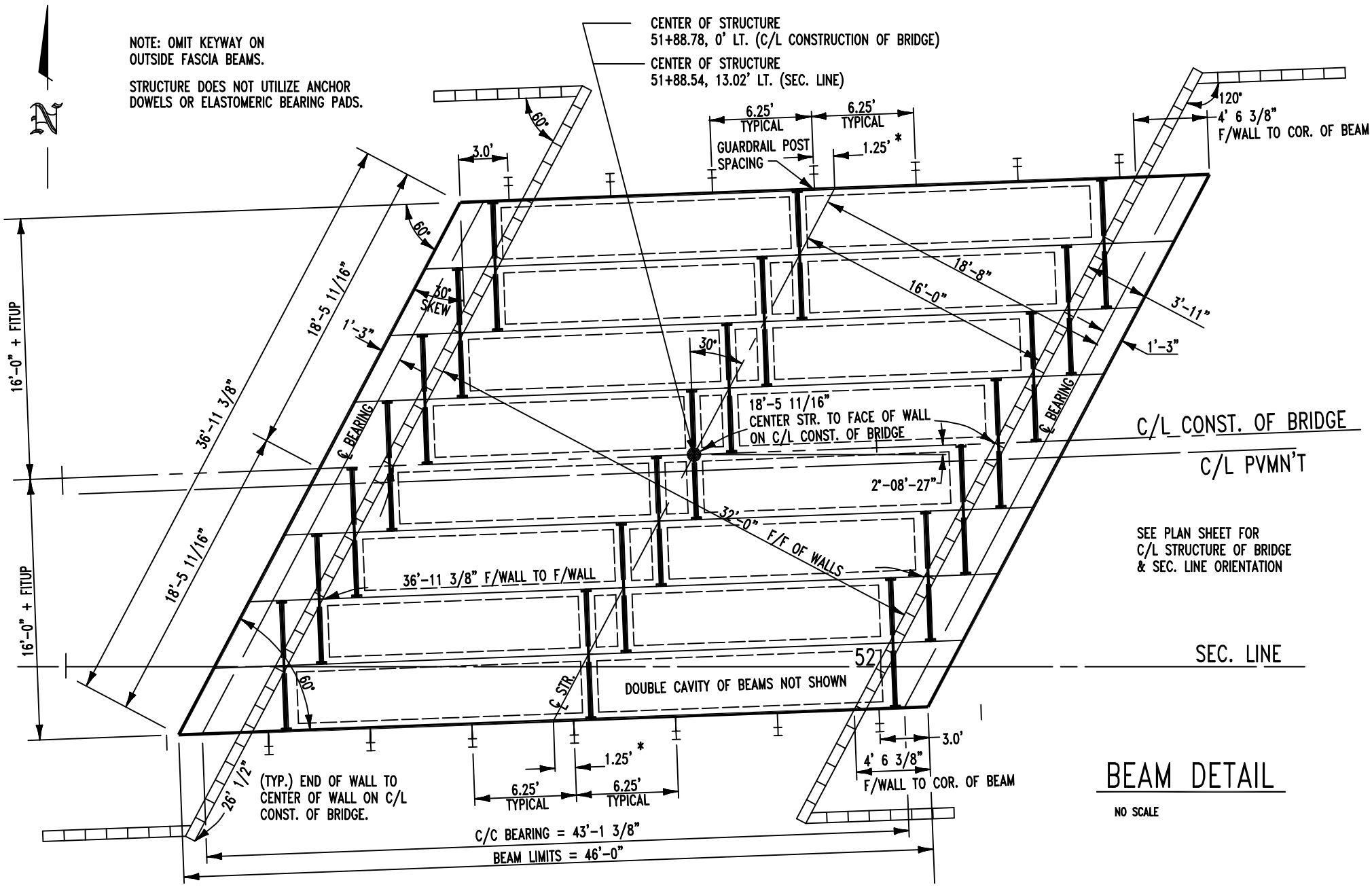

BEAM DETAIL

NO SCALE

* NOTE SHIFT OF GUARDRAIL POSTS OFF C/L STRUCTURE

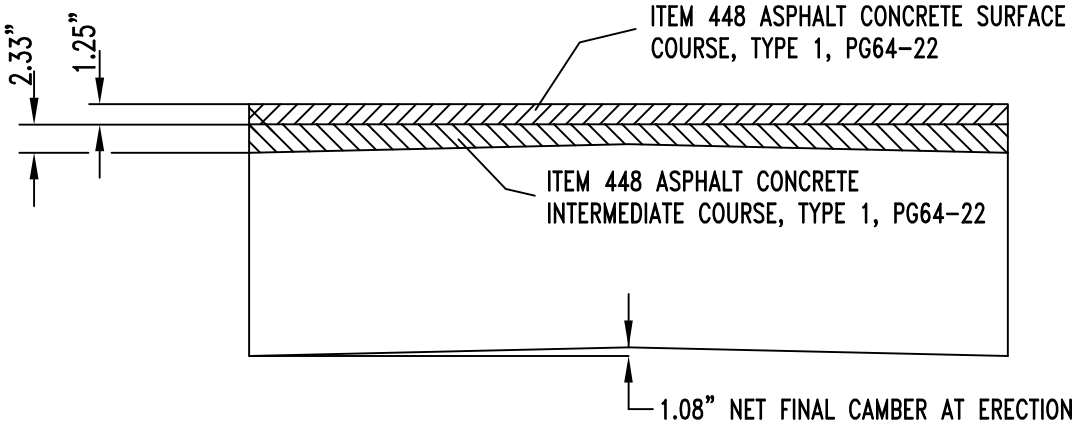

ASPHALT THICKNESS DIAGRAM

NO SCALE

ASPHALT CONCRETE COURSES: THE INTERMEDIATE COURSE SHALL BE 448 ASPHALT CONCRETE INTERMEDIATE COURSE, TYPE 1 AND SHALL HAVE A THICKNESS OF 1.25" AT THE CENTER OF THE SPAN INCREASING TO 2.33" AT THE ENDS OF THE SPAN

THE WEARING SURFACE COURSE SHALL CONSIST OF 448 ASPHALT CONCRETE, TYPE 1 AND SHALL HAVE A UNIFORM THICKNESS OF 1.25". FINAL CAMBER MAY BE DIFFERENT AND WILL BE PREAPPROVED BY THE ENGINEER BEFORE CASTING

LIVE LOADING - HL-93
CONCRETE - MIN. COMPRESSIVE STRENGTH AT 28 DAYS f'c = 7000 PSI
MIN. COMPRESSIVE STRENGTH AT TIME OF INITIAL PRESTRESS f'ci = 5000 PSI
REINFORCING STEEL - GRADE 60 MIN. YIELD STRENGTH = 60 KSI
PRESTRESSING STEEL - ASTM A416 LOW RELAXATION STRANDS
UNCOATED 7 WIRE
0.5" DIAMETER
Aps = 0.167 SQ. IN.
fpu = 270,000 PSI
Ep = 28,500 KSI
R_H = 70%
INITIAL STRESS 0.75 fpu = 202.5 KSI
INITIAL TENSION LOAD = 33.82 KIPS/STRAND

STRANDS CAN BE MOVED HORIZONTALLY DURING SHOP DRAWING PHASE. STRAND AND BAR ALIGNMENT CAN BE ALTERED AS LONG AS IT CONFORMS WITH THE ODOT STANDARD DRAWINGS

2-#4 BARS @ EA. END ON TOP, 5'-0" LONG
4-#5 BARS @ TOP
2-#5 BARS @ BOTTOM

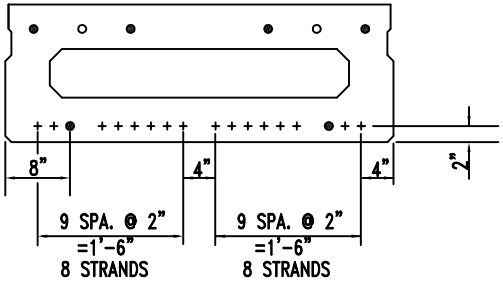

B21 x 48

FOR FURTHER DETAILS SEE STD. DRAWING PSBDD-2-07

SEALING OF CONCRETE SURFACES

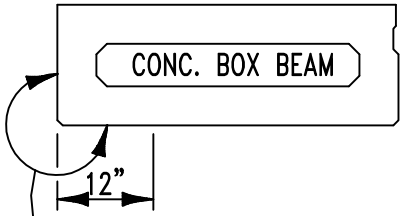

SEAL OUTSIDE FASCIA BEAMS & BOTTOM OF FASCIA BEAMS TO 12" IN FROM EDGE WITH EPOXY-URETHANE SEALER.

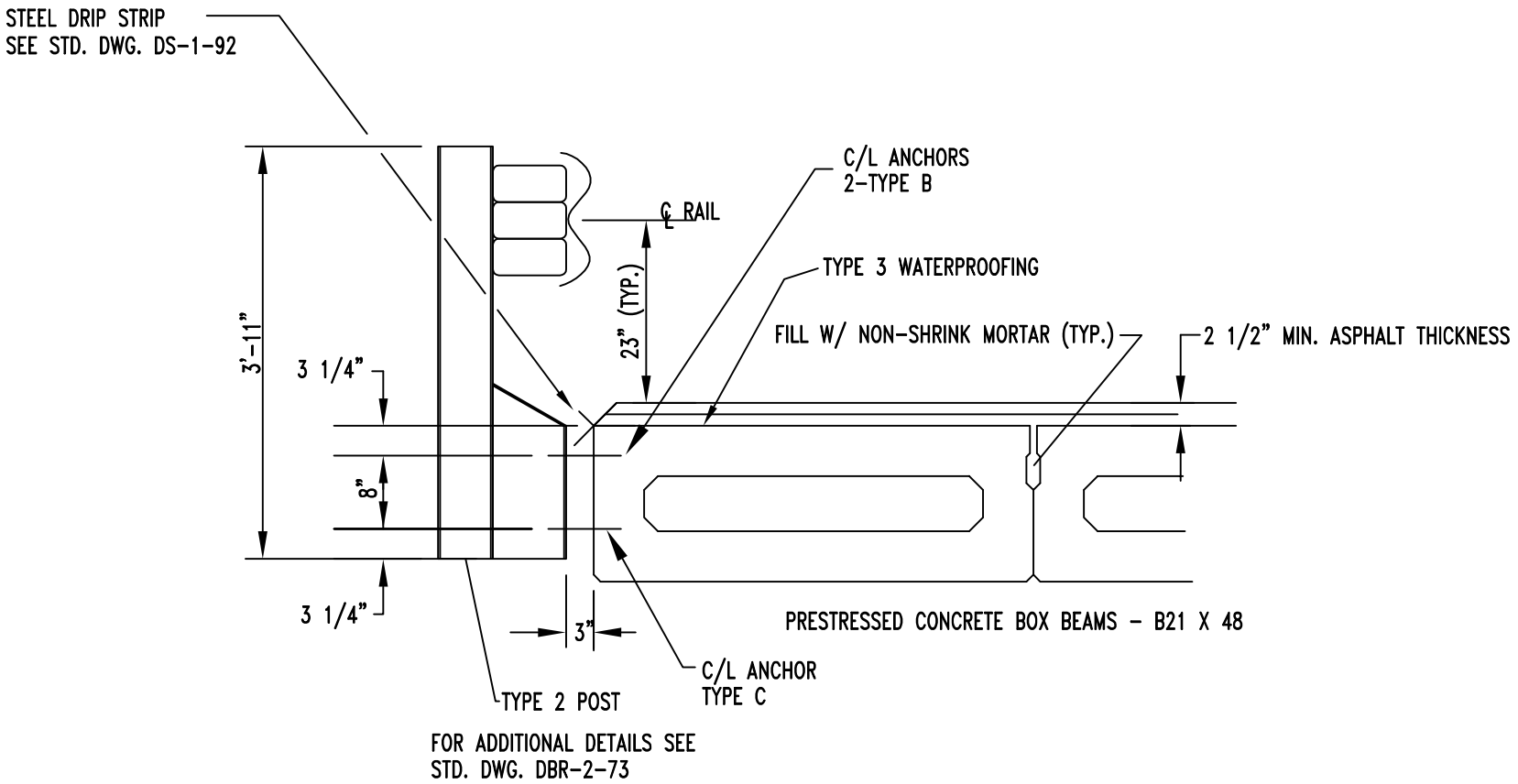

GUARDRAIL & DRIP STRIP DETAIL

NO SCALE