EARTHWORK			
END AREA		VOLUME	
CUT	FILL	CUT	FILL

R.R. SPK. @ RD. 15 & D1 IS STA. 52+74.01, ELEV. = 723.36

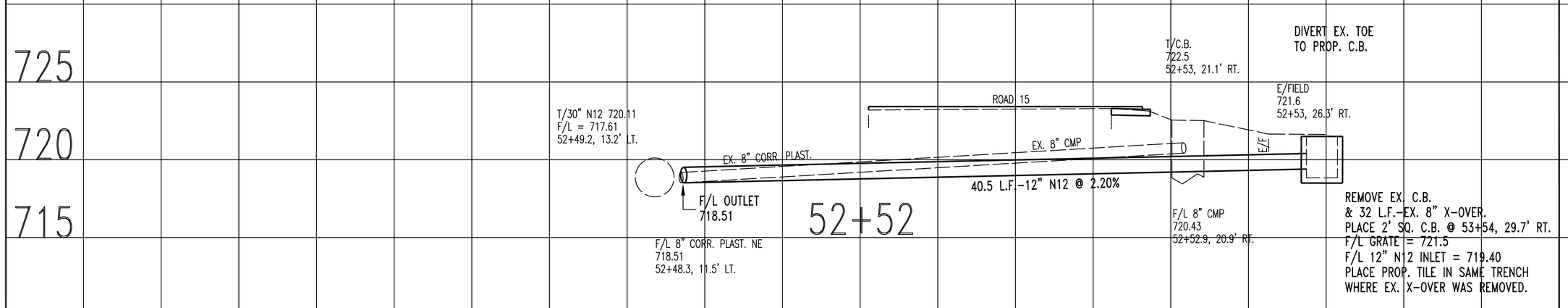

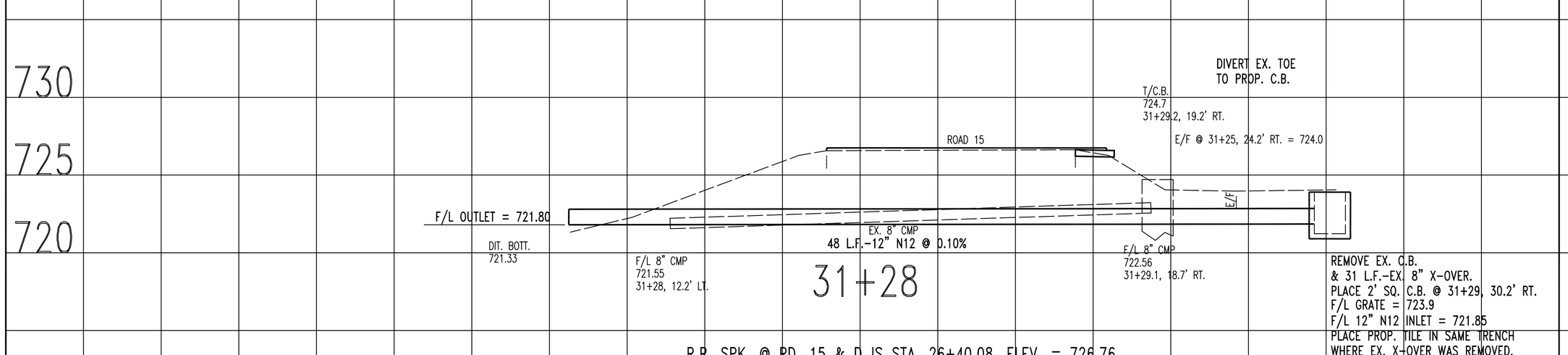

R.R. SPK. @ RD. 15 & D IS STA. 26+40.08, ELEV. = 726.76

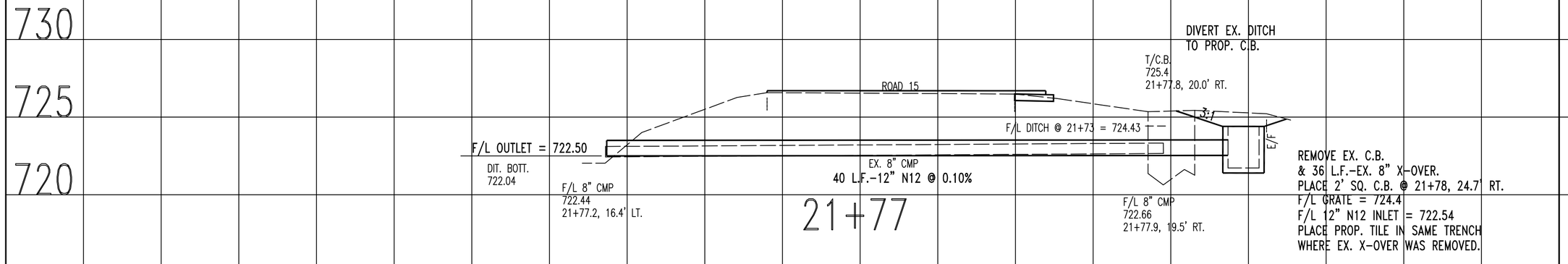

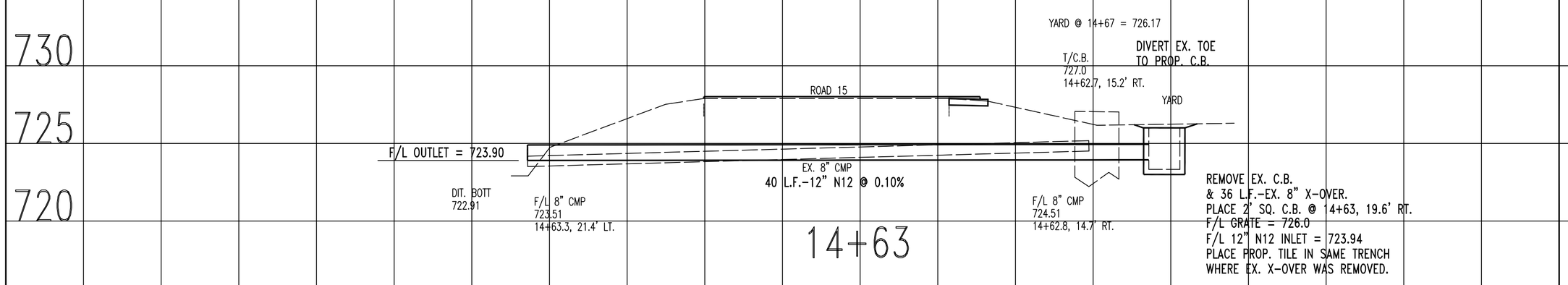

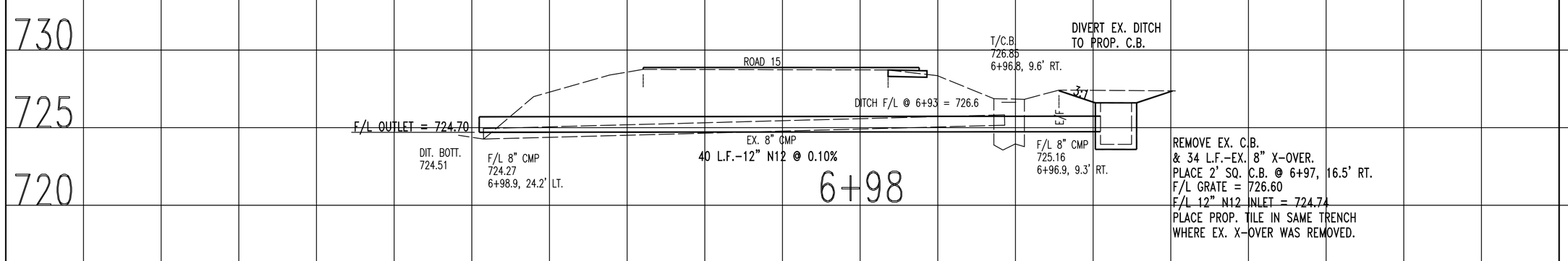

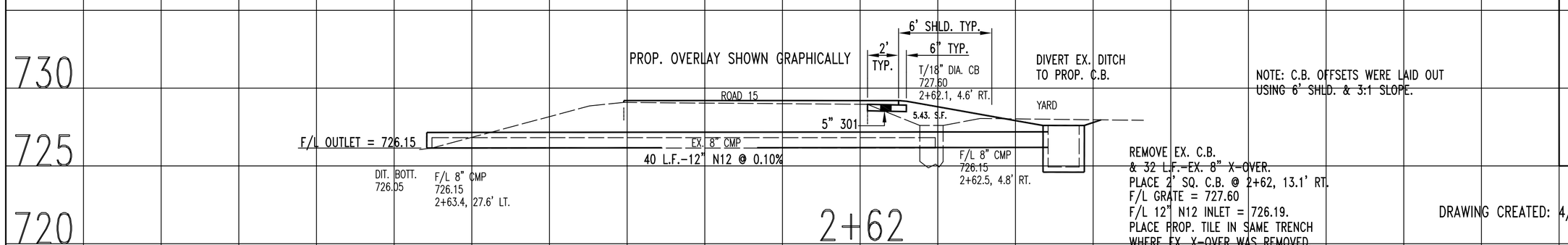

R.R. SPK. @ RD. 15 & C2 IS STA. 0+00, ELEV. = 729.37

NO RECORDED R/W

SEC. LINE

DRAWING CREATED: 4/27/2012

ROAD 15-C2 TO D1
X-OVER REPLACEMENTS
PLEASANT TWP.

1/1

FULL CROSS SECTION

CROSS SECTIONS - STA. 2+62 TO 52+52

R13/ROADS/15-C2toD1/XS1