HENRY COUNTY
DEPARTMENT OF HIGHWAYS

T.R. V – T.R. 15 TO S.R. 108

STATE OF OHIO

CONVENTIONAL SIGNS

Township Line
Section Line
Center Line
Property Line
Railroad
Fence Line (existing)
Guardrail (existing)
Trees Stumps
Utility Poles: Telephone Power
Light Brace

County Line
Corporation Limits
Construction Limits
Right of Way
Underground Utilities
(proposed)
(proposed)
(to be removed)

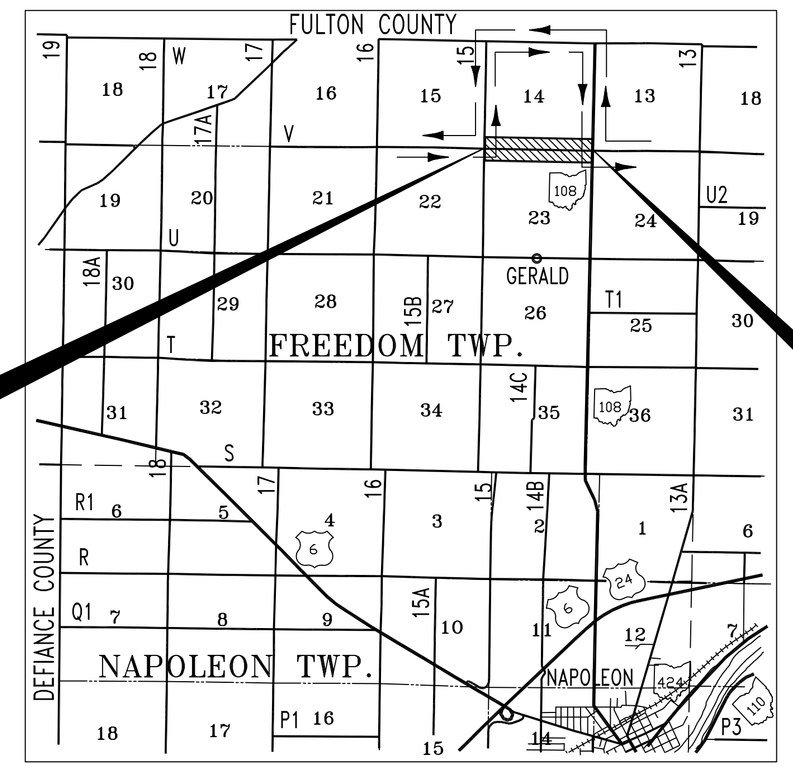

LOCATION MAP

1 1/2 0 1 2 3 4
SCALE IN MILES

Detour
Portion to be improved
State and U.S. Routes
County and Township Roads

SCALES

Plan 0' 10' 20' 30' 40' 50'

Profile __ Horizontal 0' 20' Vertical 0' 5'

Cross Section _ Horz. 0' 5' Vertical 0' 5'

2010 SPECIFICATIONS

The Standard Specifications of the Ohio Department of Transportation, including changes and supplemental specifications, listed in the proposal shall govern this improvement.

I hereby approve these plans and declare that the making of this improvement will require the closing of the highway and that the necessary lights and signs shall be maintained.

Approved _____
Date _____ Henry County Engineer

Approved _____
Date _____ Freedom Township Trustee

Approved _____
Date _____ Freedom Township Trustee

Approved _____
Date _____ Freedom Township Trustee

INDEX OF SHEETS

TITLE SHEET 1
GENERAL NOTES & TYP. SECTIONS 2
PLAN 3-4
CROSS SECTIONS 5

UNDERGROUND UTILITIES
2 WORKING DAYS
BEFORE YOU DIG
CALL 800-362-2764
OHIO UTILITY PROTECTION SERVICE
NON-MEMBERS
MUST BE CALLED DIRECTLY

SUPPLEMENTAL PRINTS OF STANDARD CONSTRUCTION DRAWINGS

BP-3.1	7-16-04
CB-1.1	7-19-02
CB-1.2	7-19-02
DM-1.1	7-19-02
MT-101.60	7-1-92

SUPPLEMENTAL SPECIFICATIONS

944	12-07-95

Plans Prepared By
HENRY COUNTY ENGINEER'S OFFICE
NAPOLEON, OHIO

DEPARTMENT OF HIGHWAYS
HENRY COUNTY, OHIO

TITLE SHEET

TOWNSHIP ROAD V
ROAD & DRAINAGE IMPROVEMENTS
BETWEEN TWP. RD. 15 & S.R. 108
FREEDOM TWP.

Designed:	Drawn:	Checked:	File Name:
HEN. CO. ENG.	S.J.K.	T.J.S	C:/R13/ROADS/V-15_108/TITLESHEET

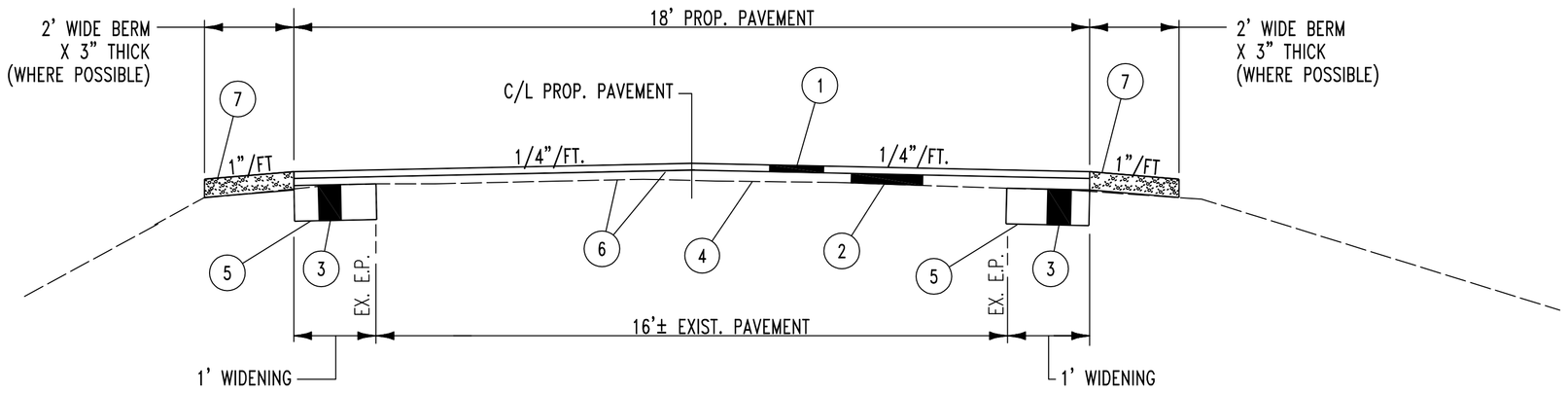

PAVEMENT WIDENING SECTION NOT TO SCALE

LEGEND

* ① ITEM 448 – 1 1/2" ASPHALT CONCRETE SURFACE COURSE, TYPE 1 (TEMP. PAVEMENT MARKINGS INCLUDED UNDER ITEM 448)
* ② ITEM 448 – 1 1/4" ASPHALT CONCRETE INTERMEDIATE/LEVELING COURSE
③ ITEM 203 – EXCAVATION / 10"± DEPTH
④ ITEM SPECIAL – PRE–PULVERIZATION, SHAPING, BLENDING, APPLICATION OF ADDITIVES, COMPACTION & FINE GRADING
⑤ ITEM 204 – SUBGRADE COMPACTION
⑥ ITEM 407 – TACK COAT, APPLIED AT THE RATE OF 0.05 GAL./S.Y.
(OVER EX. PAVEMENT & BETWEEN INTERMEDIATE & SURFACE COURSE)
⑦ ITEM 304 – AGGREGATE FOR BERM (THICKNESS & WIDTH VARIES)

* MATERIAL SHALL BE PLACED FULL WIDTH.
PAVER SHALL BE EQUIPPED WITH A FORTY (40)
FOOT AUTOMATICALLY CONTROLLED LEVELING SKI.

GENERAL NOTES

ELEVATION DATUM
All elevations are based on GPS DATUM

EROSION CONTROL
ITEM 601 is provided in the plans for erosion control. Rock of a stable nature will not be removed in order to place this item. The Engineer shall check and non–perform quantities or adjust locations and quantities for this item where indicated by field conditions during construction.

UNDERGROUND UTILITIES
The locations of underground utilities shown on the plans are as obtained from the owners of the utility as required by Section 153.64 ORC.

UTILITY OWNERSHIP
The following utilities and owners are located within the work limits of this project:

TELEPHONE: CENTURYLINK
375 E. RIVERVIEW
NAPOLEON, OHIO 43545
419/599–4024

ELECTRIC: TOLEDO EDISON POWER CO. (FIRST ENERGY)
134 LAWRENCE AVE.
WAUSEON, OHIO 43567
419/249–5900

ELECTRIC: NAPOLEON LIGHT & POWER DEPT.
255 RIVERVIEW AVE.
NAPOLEON, OHIO 43545
599–1235
599–2810 (EMERGENCY)

ITEM 603
Immediately after placement of any conduits, the Contractor shall construct the end treatments required by the plans at both the outlet and inlet ends. This shall include headwalls, wingwalls, end sections, concrete riprap, rock channel protection, sodding, etc.

Payment for any manufactured end sections, coupling bands, precast wingwalls and footings, shall be included in the unit price bid for each conduit under this item.

Where plans provide for proposed conduit to be connected to, or to cross either over or under an existing utility, it shall be the responsibility of the Contractor to locate the existing pipe or line both as to line and grade before laying the proposed conduit.

Animal guards shall be provided at the outlet of all pipes which are to be constructed by the Contractor, as per Standard Construction Drawing DM–1.1, except when they outlet into a drainage structure unless noted on plan sheet.

Payment for all operations described above shall be included in the unit price bid for the pertinent 603 conduit items.

INGRESS AND EGRESS TO DRIVES
Ingress and egress to all residential drives shall be maintained at all times during the construction of this project. Temporary closures of any drives shall require permission from the Engineer prior to closure and shall be held to as short a period of time as is necessary.

TEMPORARY PAVEMENT MARKINGS
Temporary pavement markings shall be placed upon the centerline of the surface course at approx. 50' intervals.
Temporary pavement markings shall be paid for under Item 448.

DETOURS
All necessary signs and sign supports including erecting, maintaining and removing the signs and sign supports shall be provided by the Contractor for the required project detour, as indicated on Sht. 1.

Signs and sign supports shall be as detailed in the Ohio Manual of Uniform Traffic Control Devices. Payment for providing, erecting, maintaining and removing signs and sign supports shall be included in the lump sum price bid for ITEM 614, MAINTAINING TRAFFIC.

LIGHTS AND SIGNS AT ADJACENT INTERSECTIONS
The Contractor shall, in addition to the general requirements of ITEM 614 on this project, perform the following:
Provide, erect, and maintain standard 48"x30" "ROAD CLOSED" sign supports, and lights at the following locations during the period in which the affected road is closed to traffic:

1. INT. S.R. 108 & T.R. V
2. INT. T.R. 15 & T.R. V

Sign supports and lights for "ROAD CLOSED" signs shall be as detailed in the Ohio Manual of Uniform Traffic Control Devices. Payment for providing, erecting, maintaining, and removing lights, signs, and sign supports shall be included in the lump sum price bid for ITEM 614, MAINTAINING TRAFFIC.

CONTINGENCY QUANTITIES
Items designated by plan note to be used "AS DIRECTED BY ENGINEER" are subject to adjustment. The actual work locations and quantities used at the Engineer's discretion shall be made a matter of record by incorporation into the final change order governing completion of this project.

PLAN SHEET

3/5

ROAD & DRAINAGE IMPROVEMENTS
T.R. V – T.R. 15 TO S.R. 108

BENCH MARKS
R.R. SPK. @ 0+00, ELEV. = 712.87
MAG NAIL @ 5+34.92, ELEV. = 710.81
MAG NAIL @ 10+00.02, ELEV. = 709.28
R.R. SPK. @ 26+64.66, ELEV. = 708.14
NAIL & SHINER @ 53+32.63, ELEV. = 706.80

Scale: 1"=20'

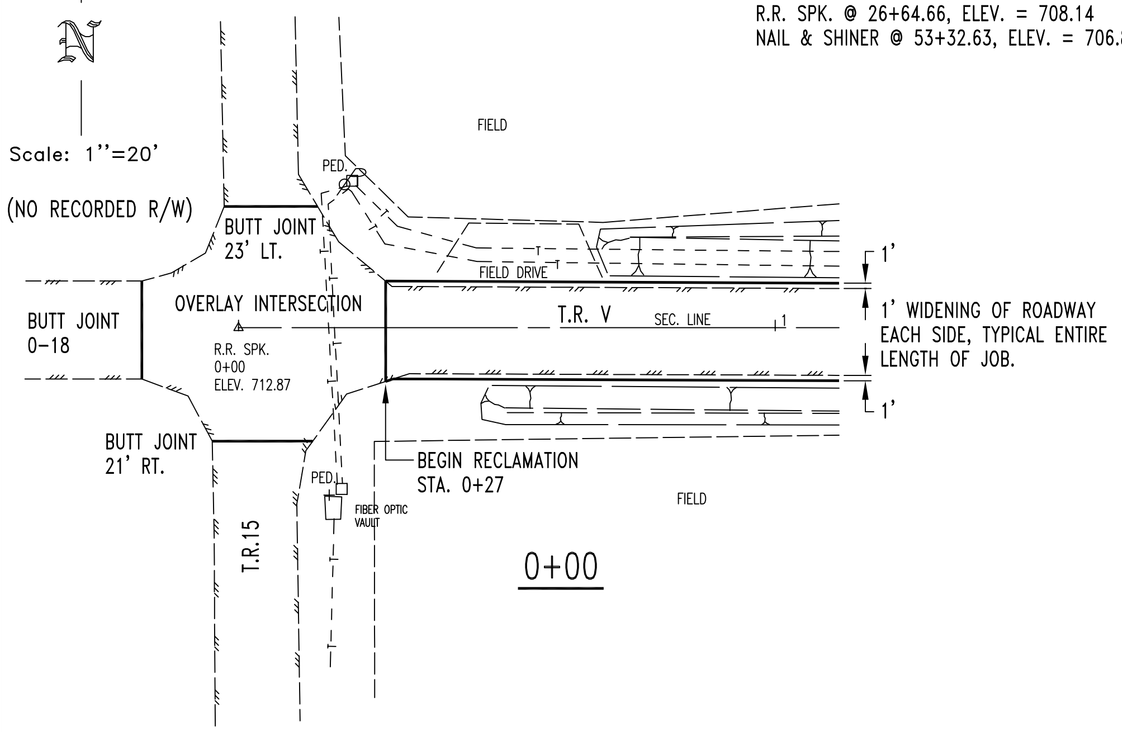

0+00

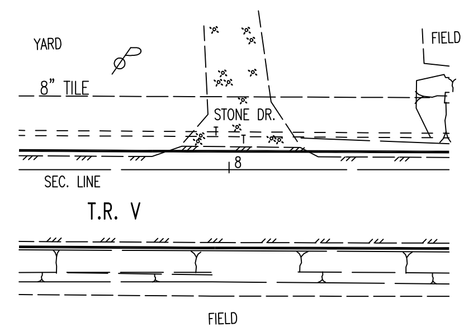

8+00

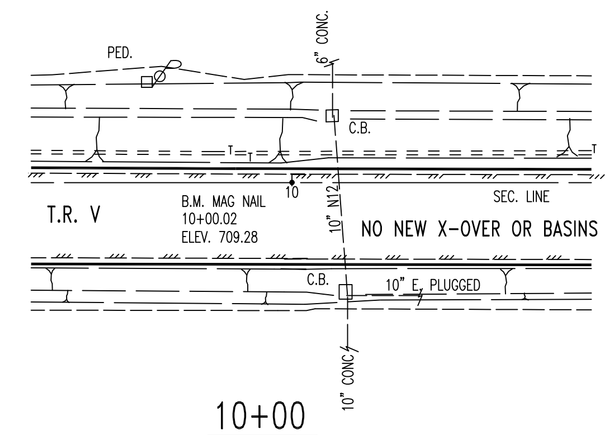

10+00

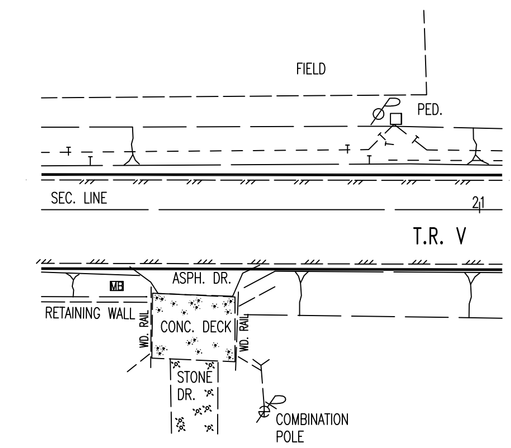

21+00

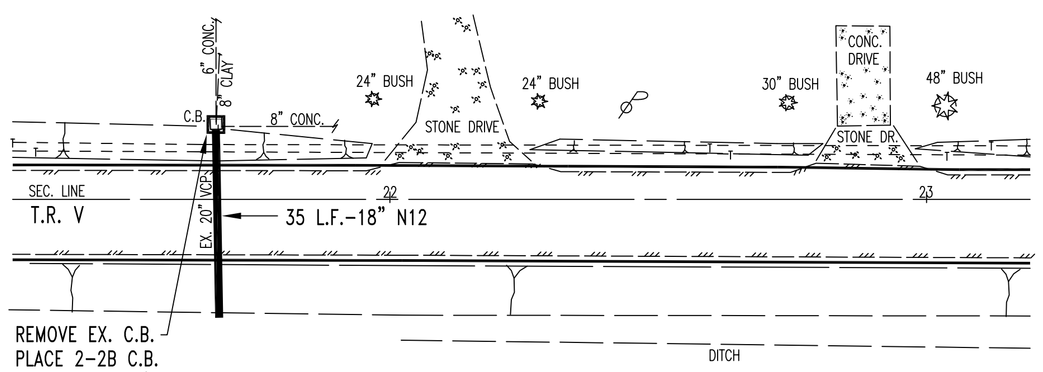

REMOVE EX. C.B.
PLACE 2-2B C.B.
@ 21+68, 14.3' LT.
TOP C.B = 703.8
PLACE 35 L.F.-18" N12
IN SAME TRENCH AS EX.
20" VCP.
F/L INLET -18" = 700.9
F/L OUTLET -18" = 700.8
RE-CONNECT EX. TILE TO NEW C.B.

22+00

REMOVE EX. C.B.
PLACE 2-4 C.B.
STA. 27+02.5, 15.2' LT.
TOP C.B. = 703.0
PLACE 42 L.F.-12" N12 IN
SAME TRENCH AS EX. 12" CLAY.
F/L 12" INLET = 700.32
F/L 12" OUTLET = 699.72
RE-CONNECT EX. TILE TO NEW C.B.

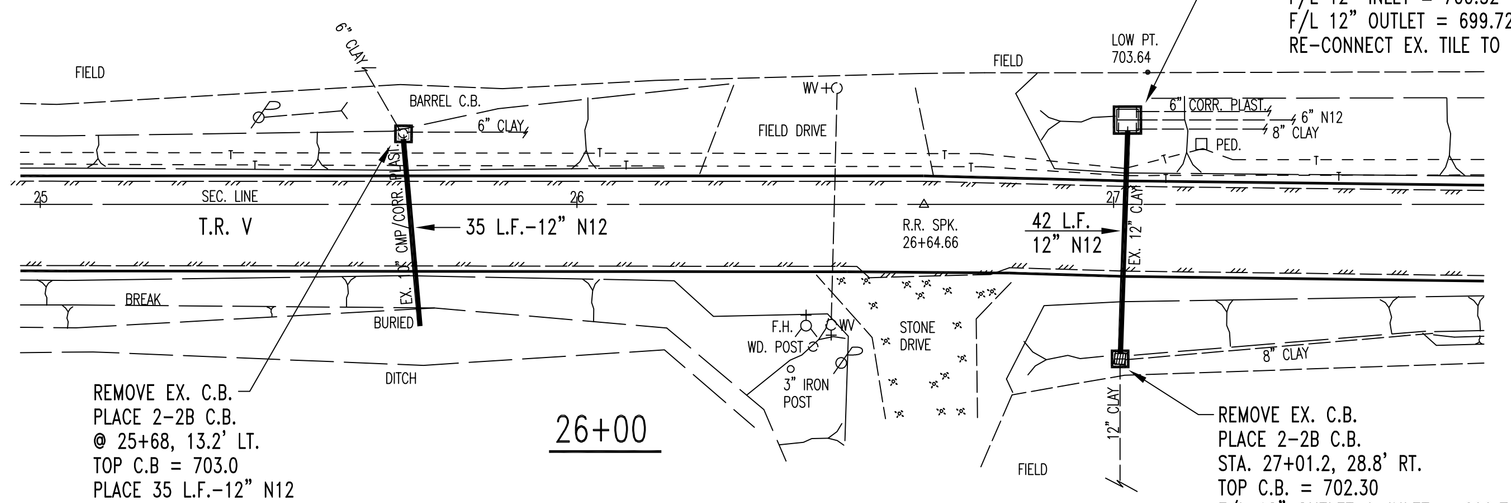

REMOVE EX. C.B.
PLACE 2-2B C.B.
@ 25+68, 13.2' LT.
TOP C.B = 703.0
PLACE 35 L.F.-12" N12
IN SAME TRENCH AS EX.
10" CMP/CORR. PLAST. TILE.
F/L INLET -12" = 701.0
F/L OUTLET -12" = 700.9
RE-CONNECT EX. TILE TO NEW C.B.

26+00

REMOVE EX. C.B.
PLACE 2-2B C.B.
STA. 27+01.2, 28.8' RT.
TOP C.B. = 702.30
F/L 12" OUTLET & INLET = 699.72
RE-CONNECT EX. TILE TO NEW C.B.

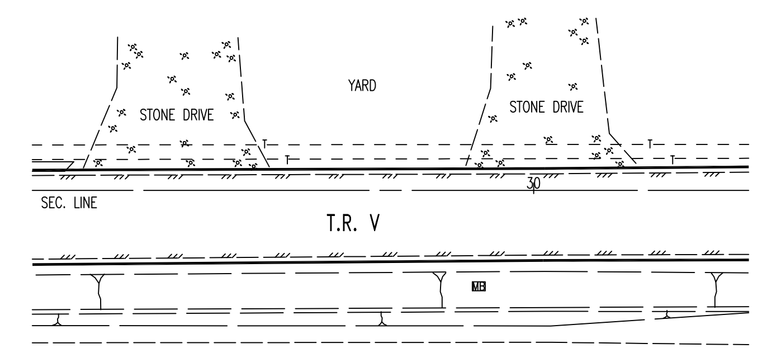

30+00

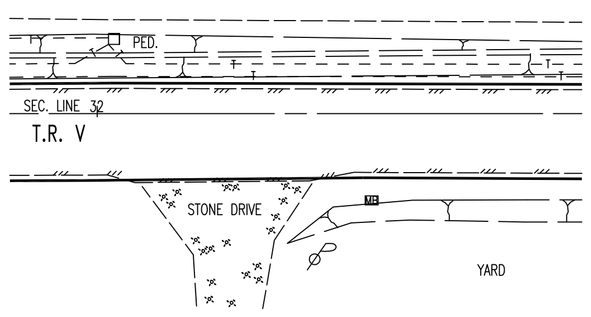

32+00

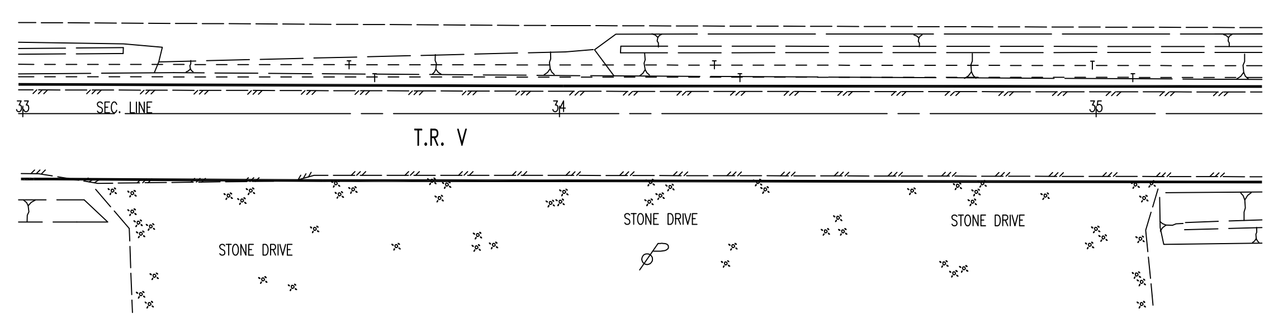

34+00

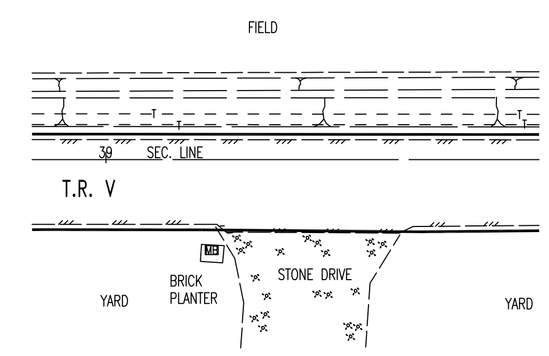

39+00

PLAN

R13/ROADS/V-15_108/PLAN

BENCH MARKS
R.R. SPK. @ 0+00, ELEV. = 712.87
MAG NAIL @ 5+34.92, ELEV. = 710.81
MAG NAIL @ 10+00.02, ELEV. = 709.28
R.R. SPK. @ 26+64.66, ELEV. = 708.14
NAIL & SHINER @ 53+32.63, ELEV. = 706.80

PLAN SHEET

4/5

ROAD & DRAINAGE IMPROVEMENTS
T.R. V – T.R. 15 TO S.R. 108

Scale: 1"=20'

(NO RECORDED R/W)

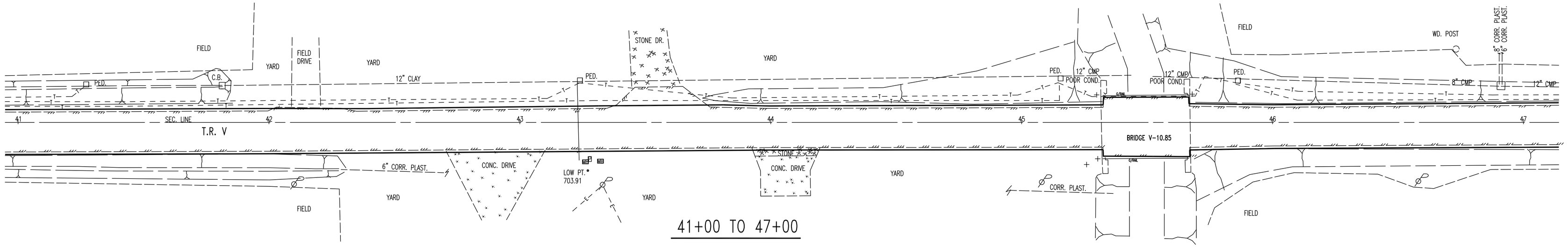

41+00 TO 47+00

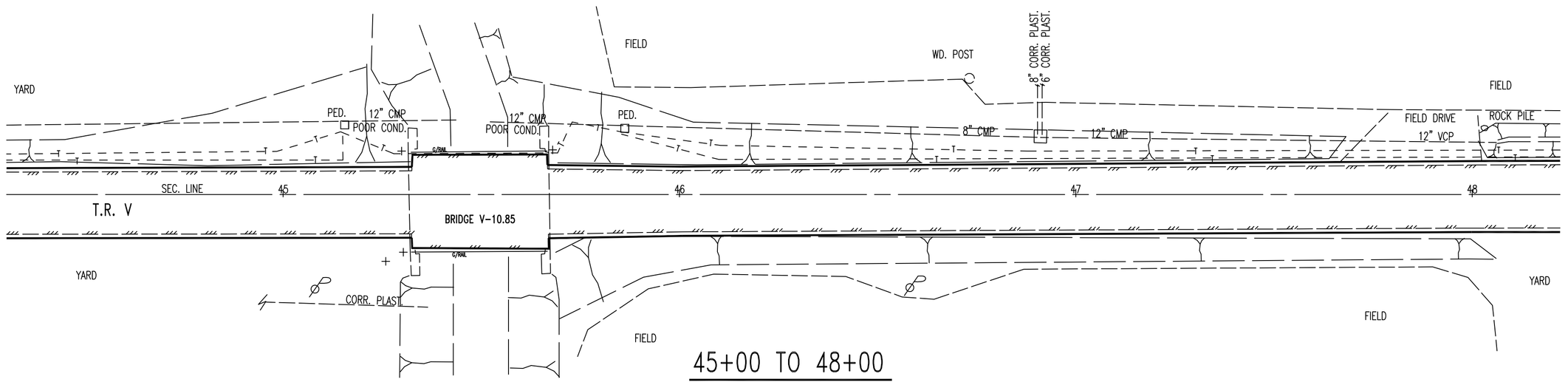

45+00 TO 48+00

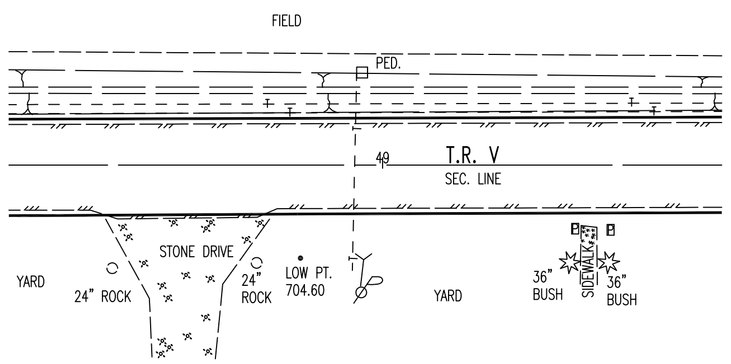

49+00

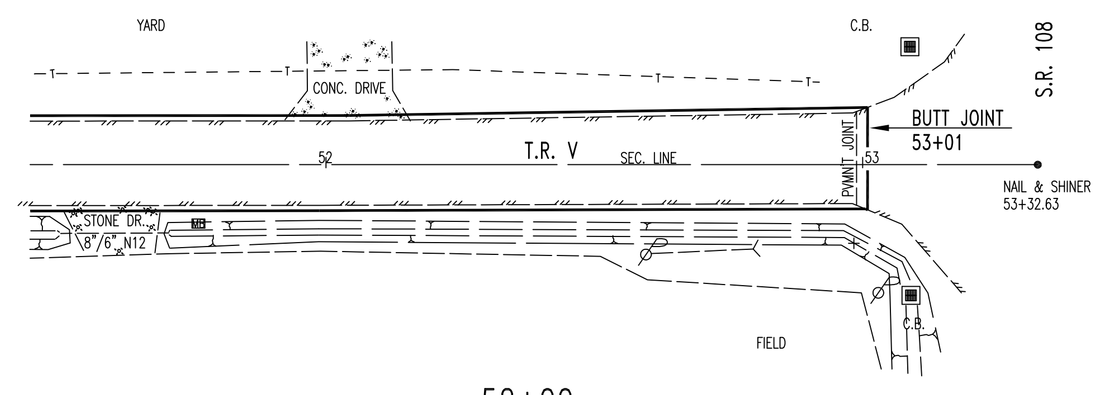

52+00

PLAN

R13/ROADS/V-15_108/PLAN2

EARTHWORK			
END AREA		VOLUME	
CUT	FILL	CUT	FILL

FULL CROSS SECTION

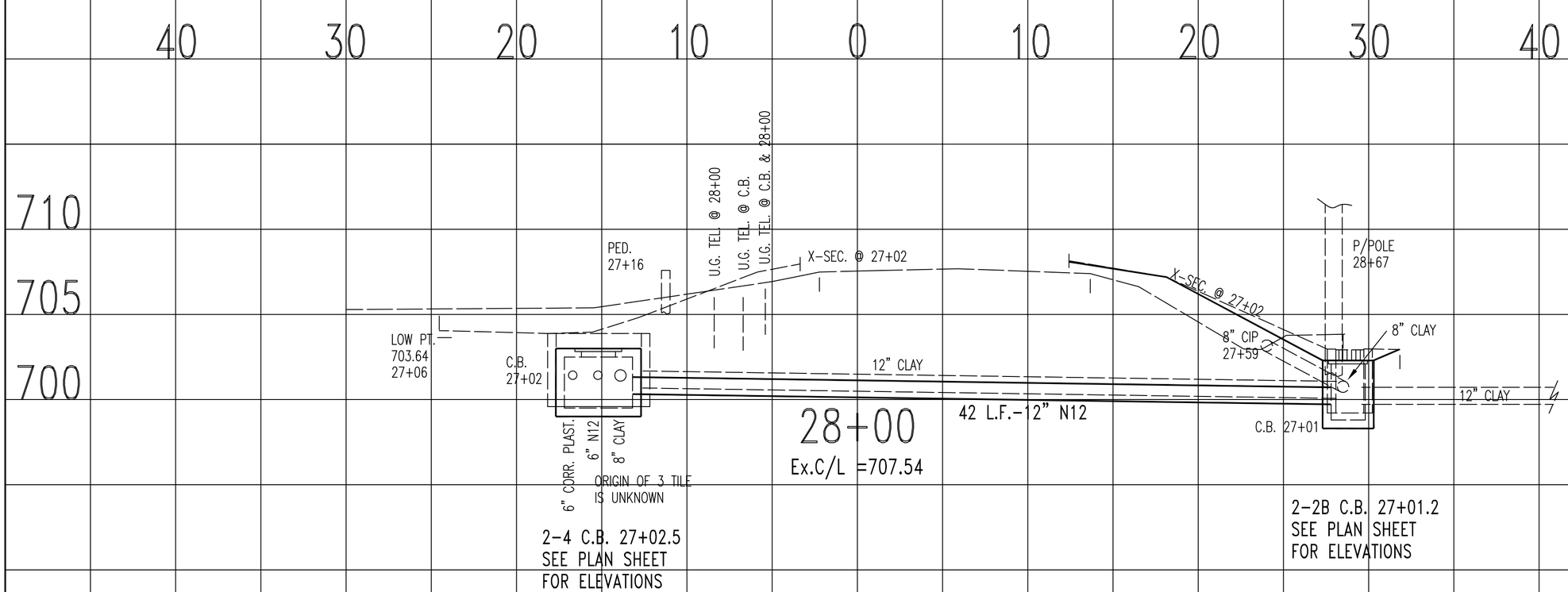

CROSS SECTIONS - DRAINAGE X-SECTIONS

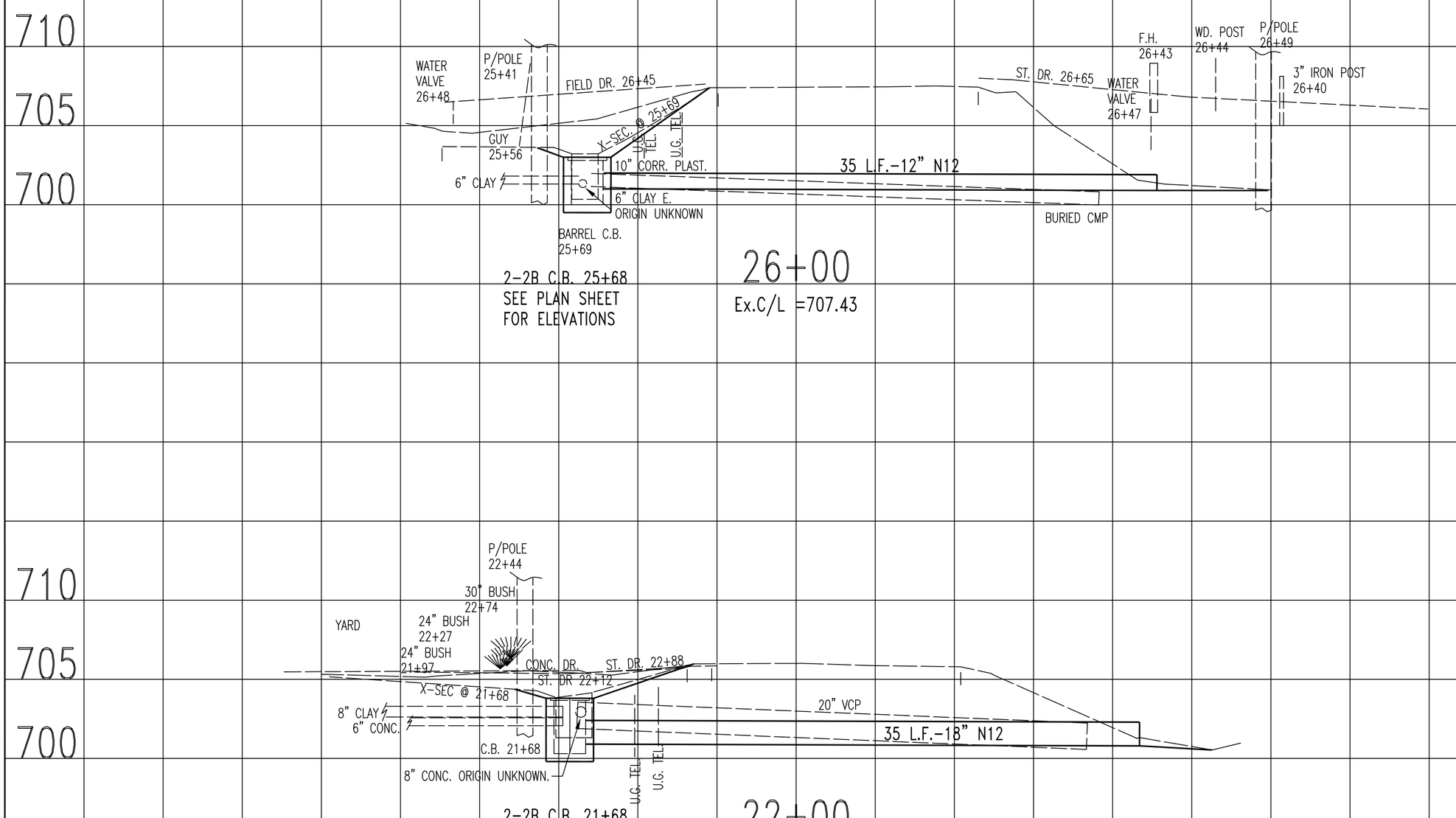

NOTE: PAVEMENT & PAVEMENT WIDENING ARE NOT SHOWN ON THESE SECTIONS. REFER TO TYPICAL SECTION SHEET.

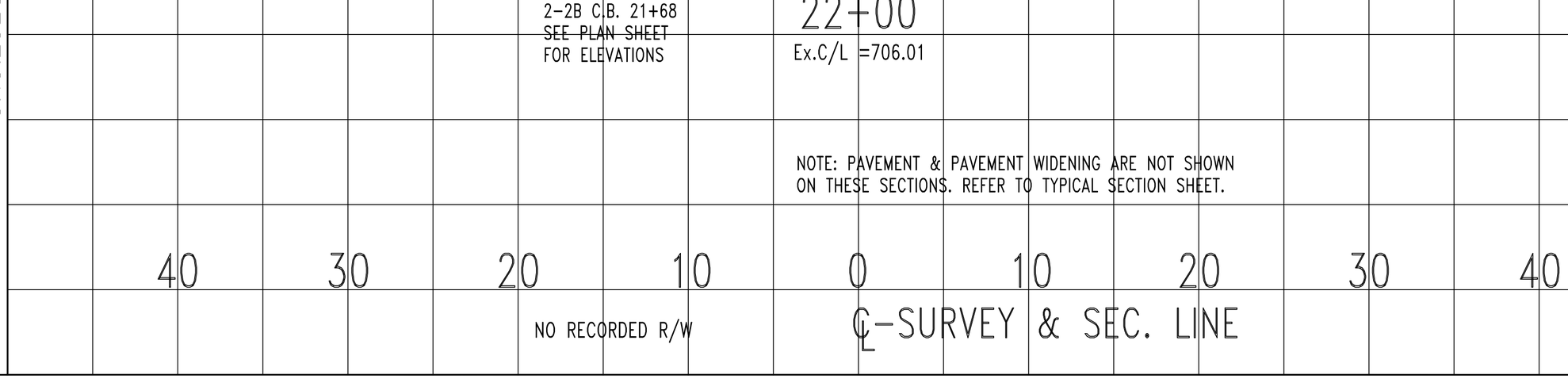

T.R. V, T.R. 15 TO S.R. 108
ROAD & DRAINAGE IMPROVEMENTS

5/5

R13/ROADS/V-15_108/XSEC5