HENRY COUNTY
DEPARTMENT OF HIGHWAYS

T.R. V – C.R. 16 TO T.R. 15

STATE OF OHIO

CONVENTIONAL SIGNS

Township Line
Section Line
Center Line
Property Line
Railroad
Fence Line (existing)
Guardrail (existing)
Trees Stumps
Utility Poles: Telephone Power
Light Brace

County Line
Corporation Limits
Construction Limits
Right of Way
Underground Utilities
(proposed)
(proposed)
(to be removed)

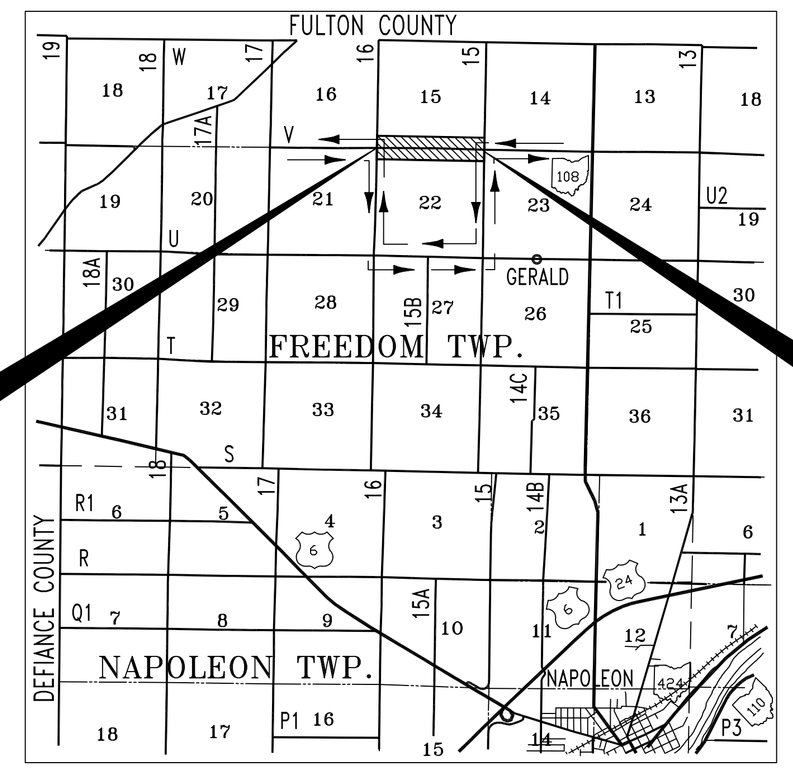

LOCATION MAP

1 1/2 0 1 2 3 4
SCALE IN MILES

Detour
Portion to be improved
State and U.S. Routes
County and Township Roads

SCALES

Plan 0' 10' 20' 30' 40' 50'

Profile __ Horizontal 0' 20' Vertical 0' 5'

Cross Section _ Horz. 0' 5' Vertical 0' 5'

2010 SPECIFICATIONS

The Standard Specifications of the Ohio Department of Transportation, including changes and supplemental specifications, listed in the proposal shall govern this improvement.

I hereby approve these plans and declare that the making of this improvement will require the closing of the highway and that the necessary lights and signs shall be maintained.

Approved _____
Date _____ Henry County Engineer

Approved _____
Date _____ Freedom Township Trustee

Approved _____
Date _____ Freedom Township Trustee

Approved _____
Date _____ Freedom Township Trustee

INDEX OF SHEETS

TITLE SHEET 1
GENERAL NOTES & TYP. SECTIONS 2
GENERAL SUMMARY & SUB-SUMMARY 3
PLAN 4
CROSS SECTIONS 5-8

UNDERGROUND UTILITIES
2 WORKING DAYS
BEFORE YOU DIG
CALL 800-362-2764
OHIO UTILITY PROTECTION SERVICE
NON-MEMBERS
MUST BE CALLED DIRECTLY

SUPPLEMENTAL PRINTS OF STANDARD CONSTRUCTION DRAWINGS				
BP-3.1	7-16-04			
HW-2.2	7-19-02			
CB-1.1	7-19-02			
DM-1.1	7-19-02			
MT-101.60	7-1-92			

SUPPLEMENTAL SPECIFICATIONS		
944	3-18-92	

Plans Prepared By
HENRY COUNTY ENGINEER'S OFFICE
NAPOLEON, OHIO

DEPARTMENT OF HIGHWAYS
HENRY COUNTY, OHIO

TITLE SHEET

TOWNSHIP ROAD V
ROAD & DRAINAGE IMPROVEMENTS
BETWEEN CO. RD. 16 & TWP. RD. 15
FREEDOM TWP.

Designed:	Drawn:	Checked:	File Name:
HEN. CO. ENG.	S.J.K.	T.J.S	G:/1R13/ROADS/V-16_15/TITLESHEET

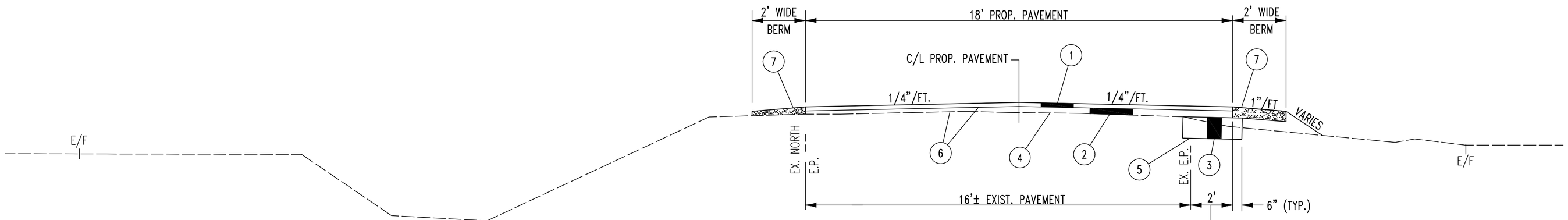

PAVEMENT WIDENING SECTION
BEGINNING TO STA. 45+00

NOT TO SCALE

LEGEND

* ① ITEM 448 – 1 1/2" ASPHALT CONCRETE SURFACE COURSE, TYPE 1 (TEMP. PAVEMENT MARKINGS INCLUDED UNDER ITEM 448)
- (1A) ITEM 448 – 3" ASPHALT CONCRETE SURFACE COURSE, TYPE 1
* ② ITEM 448 – 1 1/4" ASPHALT CONCRETE INTERMEDIATE/LEVELING COURSE
- ③ ITEM SPECIAL – 12" SUPERBERM BASE (AS MFG. BY CUSTAR STONE CO.)
- (3A) ITEM 304 – 6" & VARIES AGGREGATE BASE
- ④ ITEM SPECIAL – PRE-PULVERIZATION, SHAPING, BLENDING, APPLICATION OF ADDITIVES, COMPACTION & FINE GRADING
- ⑤ ITEM 204 – SUBGRADE COMPACTION
- ⑥ ITEM 407 – TACK COAT, APPLIED AT THE RATE OF 0.05 GAL./S.Y. (OVER EX. PAVEMENT & BETWEEN INTERMEDIATE & SURFACE COURSE)
- ⑦ ITEM 304 – AGGREGATE FOR BERM (THICKNESS & WIDTH VARIES)

* MATERIAL SHALL BE PLACED FULL WIDTH.
PAVER SHALL BE EQUIPPED WITH A FORTY (40) FOOT AUTOMATICALLY CONTROLLED LEVELING SKI.

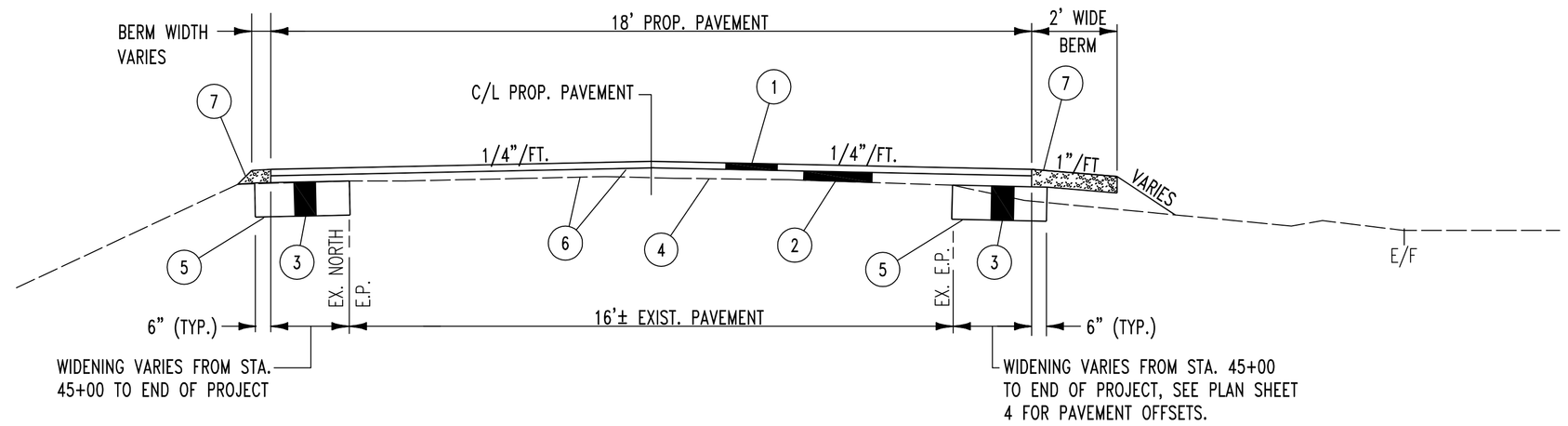

PAVEMENT WIDENING SECTION
STA. 45+00 TO END

NOT TO SCALE

GENERAL NOTES

ELEVATION DATUM
All elevations are based on ASSUMED 100

EROSION CONTROL
ITEM 601 is provided in the plans for erosion control. Rock of a stable nature will not be removed in order to place this item. The Engineer shall check and non-perform quantities or adjust locations and quantities for this item where indicated by field conditions during construction.

UNDERGROUND UTILITIES
The locations of underground utilities shown on the plans are as obtained from the owners of the utility as required by Section 153.64 ORC.

UTILITY OWNERSHIP
The following utilities and owners are located within the work limits of this project:

TELEPHONE: EMBARQ
375 E. RIVERVIEW
NAPOLEON, OHIO 43545
419/599-4024

ELECTRIC: TOLEDO EDISON POWER CO. (FIRST ENERGY)
134 LAWRENCE AVE.
WAUSEON, OHIO 43567
419/249-5900

ELECTRIC: NAPOLEON LIGHT & POWER DEPT.
255 RIVERVIEW AVE.
NAPOLEON, OHIO 43545
599-1235
599-2810 (EMERGENCY)

ITEM 603
Immediately after placement of any conduits, the Contractor shall construct the end treatments required by the plans at both the outlet and inlet ends. This shall include headwalls, wingwalls, end sections, concrete riprap, rock channel protection, sodding, etc.

Payment for any manufactured end sections, coupling bands, precast wingwalls and footings, shall be included in the unit price bid for each conduit under this item.

Where plans provide for proposed conduit to be connected to, or to cross either over or under an existing utility, it shall be the responsibility of the Contractor to locate the existing pipe or line both as to line and grade before laying the proposed conduit.

Animal guards shall be provided at the outlet of all pipes which are to be constructed by the Contractor, as per Standard Construction Drawing DM-1.1, except when they outlet into a drainage structure unless noted on plan sheet.

Payment for all operations described above shall be included in the unit price bid for the pertinent 603 conduit items.

SEEDING
Minor Lump Sum Quantities for Seeding & Mulching have been added for minor dirt embankment around catch basin areas.

INGRESS AND EGRESS TO DRIVES
Ingress and egress to all residential drives shall be maintained at all times during the construction of this project. Temporary closures of any drives shall require permission from the Engineer prior to closure and shall be held to as short a period of time as is necessary.

TEMPORARY PAVEMENT MARKINGS
Temporary pavement markings shall be placed upon the centerline of the surface course at approx. 50' intervals.
Temporary pavement markings shall be paid for under Item 448.

EXISTING STONE BERM
Existing stone berm shall be graded so that no granular material is within 6" of the finished grade as shown on the cross sections.

DETOURS
All necessary signs and sign supports including erecting, maintaining and removing the signs and sign supports shall be provided by the Contractor for the required project detour, as indicated on Sht. 1.

Signs and sign supports shall be as detailed in the Ohio Manual of Uniform Traffic Control Devices. Payment for providing, erecting, maintaining and removing signs and sign supports shall be included in the lump sum price bid for ITEM 614, MAINTAINING TRAFFIC.

LIGHTS AND SIGNS AT ADJACENT INTERSECTIONS
The Contractor shall, in addition to the general requirements of ITEM 614 on this project, perform the following:
Provide, erect, and maintain standard 48"x30" "ROAD CLOSED" sign supports, and lights at the following locations during the period in which the affected road is closed to traffic:

1. INT. C.R. 16 & T.R. V
2. INT. T.R. 15 & T.R. V

Sign supports and lights for "ROAD CLOSED" signs shall be as detailed in the Ohio Manual of Uniform Traffic Control Devices. Payment for providing, erecting, maintaining, and removing lights, signs, and sign supports shall be included in the lump sum price bid for ITEM 614, MAINTAINING TRAFFIC.

CONTINGENCY QUANTITIES
Items designated by plan note to be used "AS DIRECTED BY ENGINEER" are subject to adjustment. The actual work locations and quantities used at the Engineer's discretion shall be made a matter of record by incorporation into the final change order governing completion of this project.

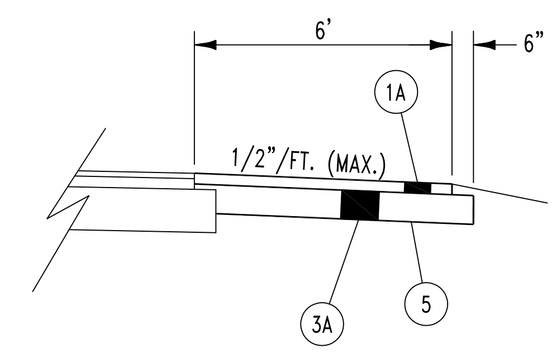

DRIVEWAY DETAIL

NOT TO SCALE

GENERAL SUMMARY

ITEM	GRAND TOTAL	UNIT	DESCRIPTION
			ROADWAY
202	3	EACH	TILE ABANDONED, PLUG END OF TILE
202	2	EACH	CATCH BASIN REMOVED
202	134	L.F.	PIPE REMOVED, 24" & UNDER
203	435	C.Y.	EXCAVATION
204	1553	S.Y.	SUBGRADE COMPACTION
			EROSION CONTROL
659	1	L.S.	WATER
659	1	L.S.	SEEDING & MULCHING
659	1	L.S.	COMMERCIAL FERTILIZER
601	24	C.Y.	ROCK CHANNEL PROTECTION, TYPE D W/O FILTER (18" THICK)
			DRAINAGE
602	1.65	C.Y.	CONCRETE MASONRY (HEADWALL)
603	40	L.F.	8" CONDUIT, TYPE B, 707.33
603	165	L.F.	12" CONDUIT, TYPE B, 707.33 (TO INCLUDE 1 15"X15"X12" M12 TEE, AS PER PLAN)
603	34	L.F.	12" CONDUIT, TYPE D, 707.33
603	8	L.F.	83"X53" CONDUIT, TYPE C, 706.04 (TO INCLUDE MINOR CHANNEL RELOCATION)
604	5	EACH	CATCH BASIN (AS PER PLAN) (TO INCLUDE MINOR DIRT EMBANKMENT AROUND CATCH BASINS)
			PAVEMENT
304	391	C.Y.	AGGREGATE BASE (FOR DRIVES & ROADSIDE BERM)
407	1064	GAL.	TACK COAT (APPLIED @ THE RATE OF 0.05 GAL./S.Y.) (SEE TYPICAL SECTION)
448	370	C.Y.	ASPHALT CONCRETE INTERMEDIATE/LEVELING COURSE
448	462	C.Y.	ASPHALT CONCRETE SURFACE COURSE (TYPE 1) (TO INCLUDE TEMPORARY PAVEMENT MARKINGS)
SPECIAL	500	C.Y.	SUPERBERM BASE (AS MFG. BY CUSTAR STONE CO.) (FOR ROAD WIDENING)
SPECIAL	2	EA.	BUTT JOINTS (119 L.F.)
SPECIAL	9475	S.Y.	PRE-PULVERIZATION, SHAPING, BLENDING, APPLICATION OF ADDITIVES, COMPACTION & FINE GRADING
SPECIAL	86	TON	PORTLAND CEMENT ADDITIVE
SPECIAL	11370	GAL.	BITUMINOUS STABILIZING ADDITIVE
SPECIAL	9475	S.Y.	FOG SEAL INCLUDING COVER AGGREGATE
			MISCELLANEOUS
614	1	L.S.	MAINTAINING TRAFFIC
623	1	L.S.	CONSTRUCTION LAYOUT STAKES
624	1	L.S.	MOBILIZATION
642	1.98	MILE	EDGE LINE, TYPE 1
642	0.99	MILE	CENTER LINE, TYPE 1
103.05	1	L.S.	CONTRACT PERFORMANCE & PAYMENT BOND

SUB-SUMMARY

TO INCLUDE MINOR CHANNEL RELOCATION

TO INCLUDE MINOR DIRT EMBANKMENT AROUND C.B.'S

REF. NO.	STATION FROM	STATION TO	SIDE	ROAD	202 TILE ABANDONED PLUG END OF TILE (EACH)	202 CATCH BASIN REMOVED (EACH)	202 PIPE REMOVED 24" & UNDER (L.F.)	601 ROCK CHANNEL PROTECTION, TYPE D W/O FILTER (18" THICK) (C.Y.)	602 CONCRETE MASONRY (HEADWALLS) (C.Y.)	603 8" CONDUIT TYPE B 707.33 (L.F.)	603 12" CONDUIT TYPE B, 707.33 INCLUDES 1 15"X15"X12" M12 TEE (AS PER PLAN) (L.F.)	603 12" CONDUIT TYPE D 707.33 (L.F.)	603 83" X 53" CONDUIT TYPE C, 706.04 (L.F.)	604 CATCH BASIN (AS PER PLAN) (EACH)	SHEET NUMBER
1R	41+97	–	RT.	V		1									4/8
2R	41+97	41+99	L & R	V			32								4/8
–	–	–	–	–											–
–	–	–	–	–											–
5R	46+82	–	RT.	V		1									4/8
6R	46+82	46+87	L & R	V			28								4
7R	46+81	–	RT.	V	1										4
8R	45+97	–	RT.	V	1										4
9R	46+82	–	RT.	V	1										4
10R	50+28	50+30	RT.	V			2								4
11R	19+49	–	L & R	V			36								4/6
12R	29+06	29+19	L & R	V			36								4/7
1D	41+97	41+99	L & R	V						40					4/8
2D	45+24.5	–	RT.	V										1	4/8
3D	45+24.5	–	L & R	V							40				4/8
4D	46+79.5	–	RT.	V										1	4/8
5D	46+79.5	46+88.5	L & R	V							42				4/8
6D	50+27	–	RT.	V									8		4/8
7D	50+27	–	RT.	V					1.65						4/8
8D	19+49	–	L & R	V							43				4/6
9D	19+49	–	RT.	V										1	4/6
10D	19+49	19+85	RT.	V								34			4
11D	19+85	–	RT.	V										1	4
12D	31+33	–	RT.	V										1	4/7
13D	31+33	–	L & R	V							40				4/7
1RCP	50+17	50+46	RT.	V				24							4
TOTALS					3	2	134	24	1.65	40	165	34	8	5	

NOTE: SEE TYP. SECTION
ON SHEET 2

*-REFER TO DWG BP-4.1

QUANTITIES FOR BACKING UP DRIVES

FIELD & RESIDENTIAL DRIVES*

Ref. No.	Station	Rt./Lt.	A	B	C	D	448	203	204	304	304	
1	6+92	LT.								1		
2	13+15	LT.	33	6	20		1.3	2	16		3	144 SF
3	17+50	LT.	45	6	30		2.0			1	–	217 SF
4	19+72	RT.	27	6	15		1.2			2	2	126 SF
5	20+09	LT.									2	
6	20+90	RT.	28	6	16		1.2			2	2	134 SF
7	22+32	RT.	37	6	25	6			18		6	324 SF
8	26+95	LT.	29	6	16		1.2			1		125 SF
9	30+34	LT.	36	6	24		1.6			7		178 SF
10	31+55	RT.	32	6	24		1.5			1		165 SF
11	31+85	LT.	28	6	18		1.3			1		137 SF
12	33+00	LT.	36	6	24		1.7			2		180 SF
13	38+18	RT.	37	6	25	5		1	4		11	309 SF
14	38+18	LT.	31	7	21		1.0					
15	39+84	LT.								1		
16	46+00	LT.	29	6	16		1.2			1		133 SF
17	46+30	RT.	34	6	23		1.6			2	3	172 SF
18	47+47	RT.	24	6	15		1.0			1	1	110 SF
19	50+42	LT.								7		
20	52+31	RT.	21	2.5	19		0.5	1	5		1	48 SF
TOTALS							18	4	43	30	31	

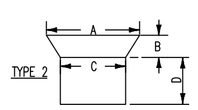

3" - 448
6" & VARIES - 304

DRIVE TOTALS
304 = 61 C.Y.
448 = 18 C.Y.
203 EXCAVATION = 4 C.Y.
204 SUBGRADE COMPACTION = 43 S.Y.

DEPARTMENT OF HIGHWAYS
HENRY COUNTY, OHIO

GENERAL SUMMARY
& SUB-SUMMARY
HENRY COUNTY T.R. V
BETWEEN C.R. 16 & T.R. 15

Designed:	Drawn:	Checked:	File Name
HEN.CO. ENG.	S.J.K	T.J.S	G:\/1913/ROADS/V-16_15/GEN-SUMM

PLAN SHEET 4/8

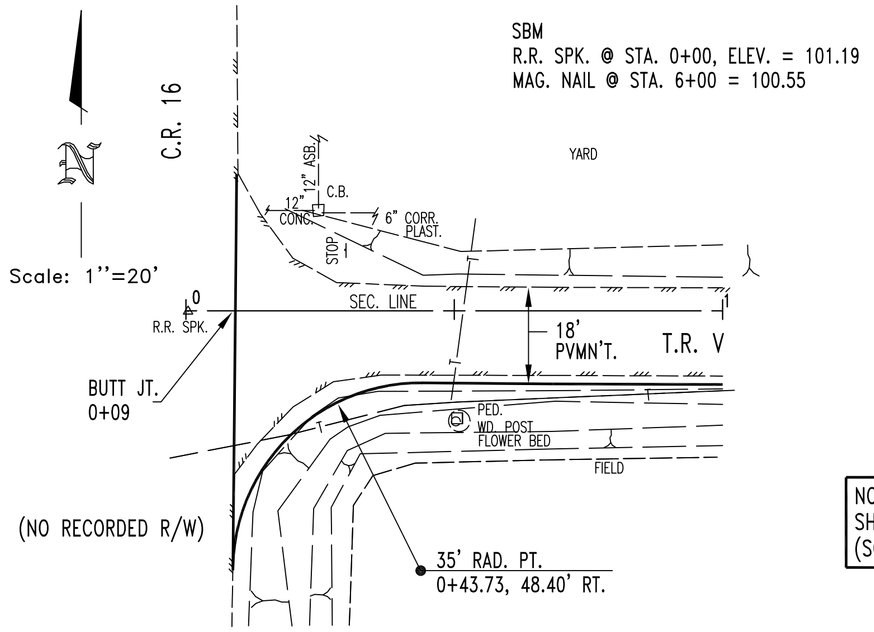

0+00 TO 1+00

NOTE: SEE DRIVEWAY TABLE ON SHEET 3 FOR DRIVEWAY INFORMATION (SOME ARE NOT SHOWN ON PLAN)

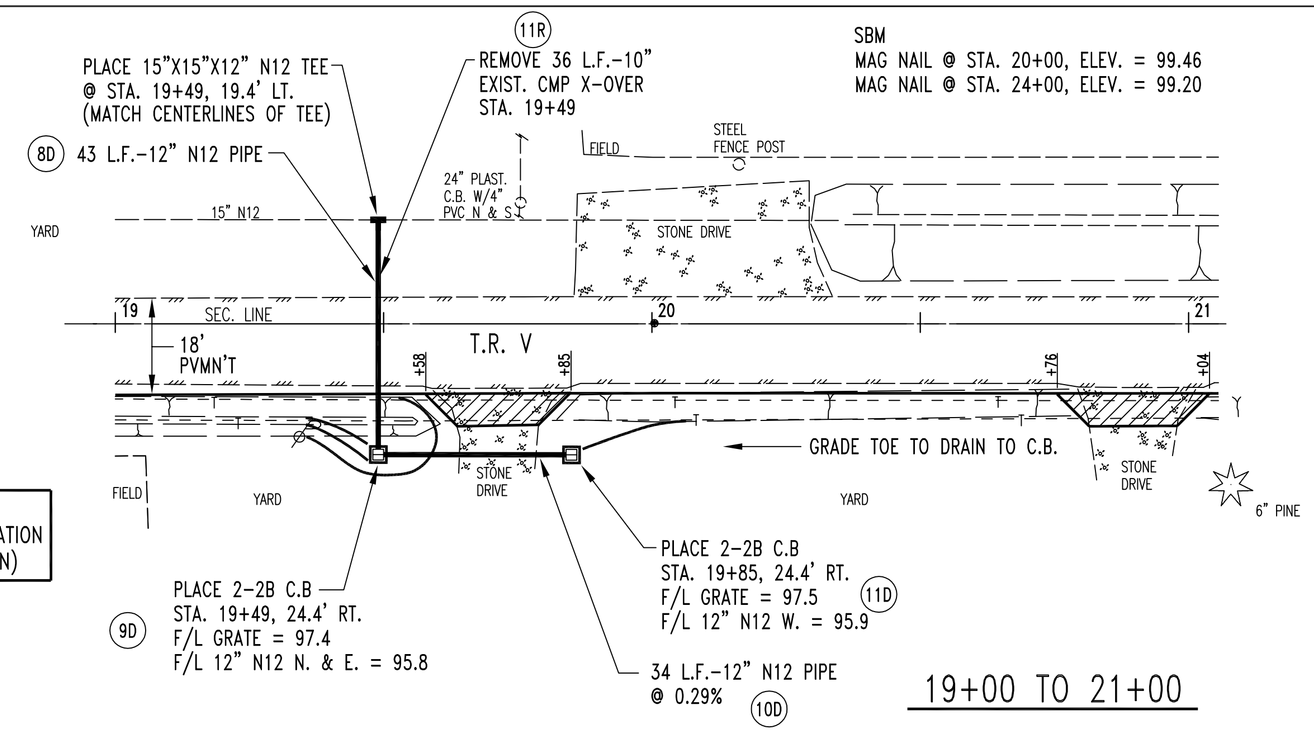

19+00 TO 21+00

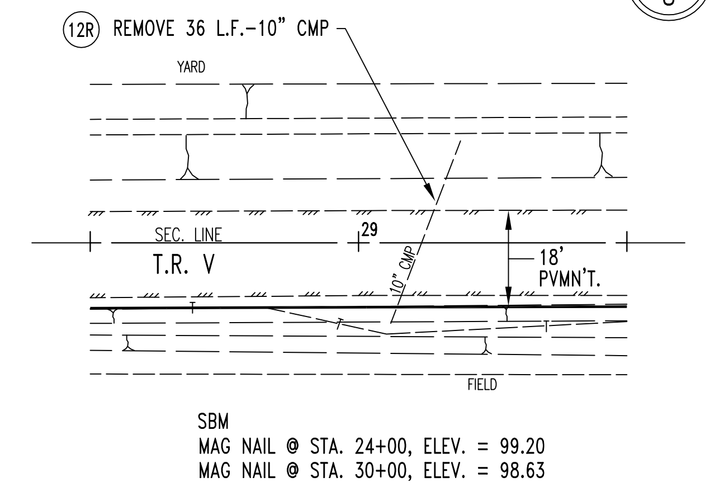

28+50 TO 29+50

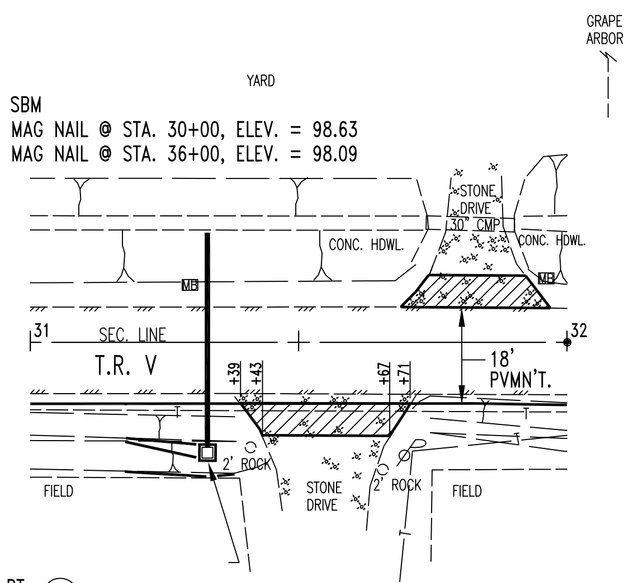

PLACE 2-2B C.B.
@ 31+33, 20.55' RT. 12D
F/L GRATE = 96.4
PLACE 40 L.F.-12" N12 NORTH @ 0.25% 13D
F/L INLET OF 12" @ C.B. = 94.41
F/L OUTLET OF 12" @ 31+33, 20.45' LT. = 94.31

31+00 TO 32+00

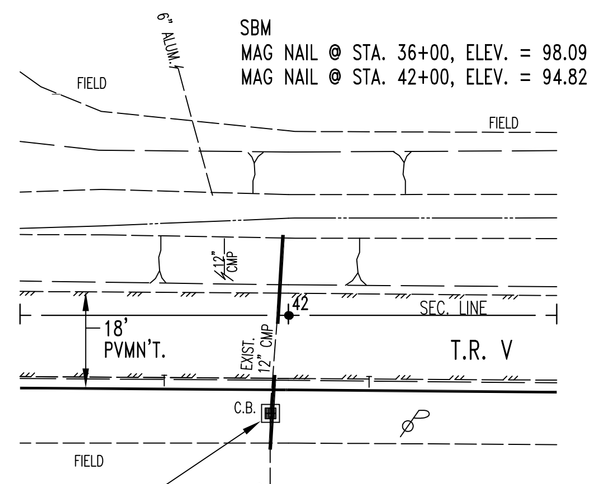

1R REMOVE C.B.
2R REMOVE 32 L.F.-12" CMP N.
EXTEND 8" CMP N. W/40 L.F.-8" N12. 1D
F/L 8" N12 @ CONNECTION
(41+97, 25' RT.) = 89.91
F/L OUTLET @ 41+99, 15.0' LT. = 89.81

41+50 TO 42+50

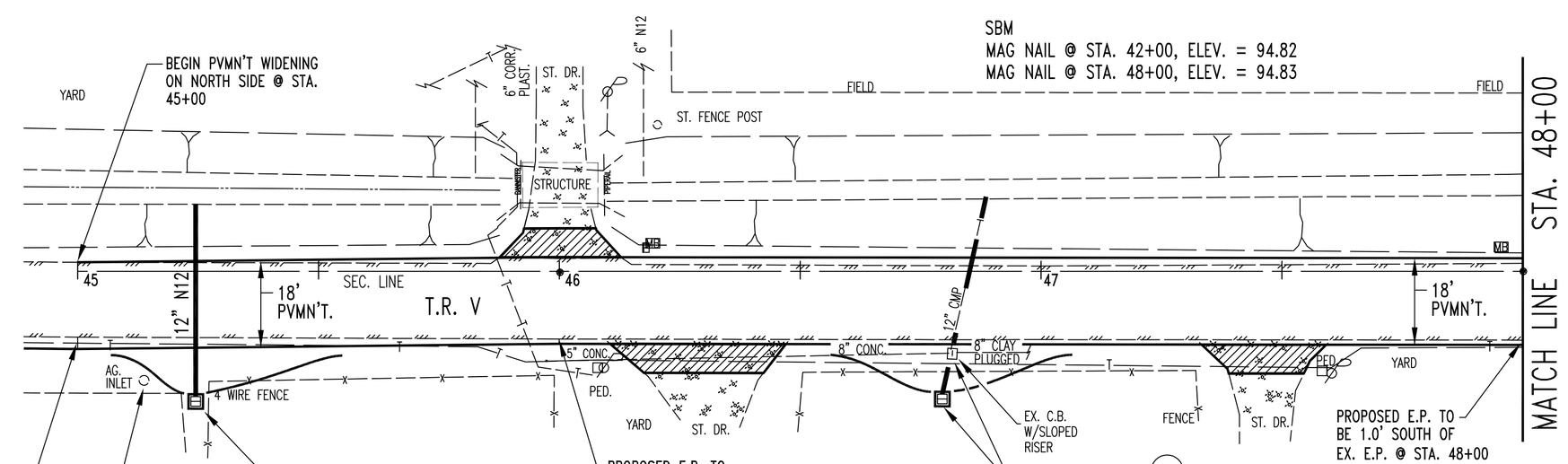

45+00 TO 48+00

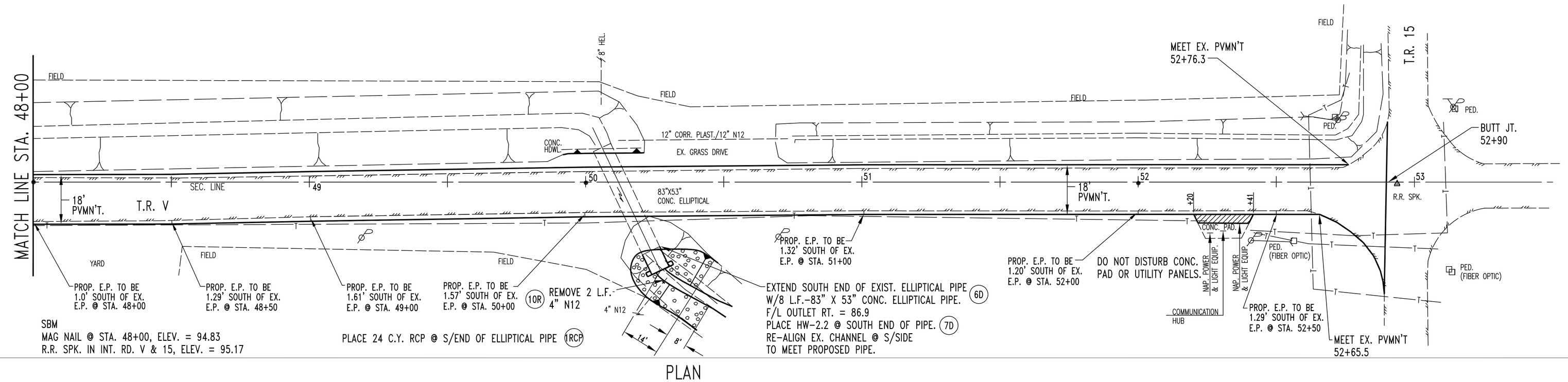

45+00 TO 52+90

PLAN

HENRY COUNTY ENGINEER

FULL CROSS SECTION

CROSS SECTIONS - STA. 0+00 TO 12+00

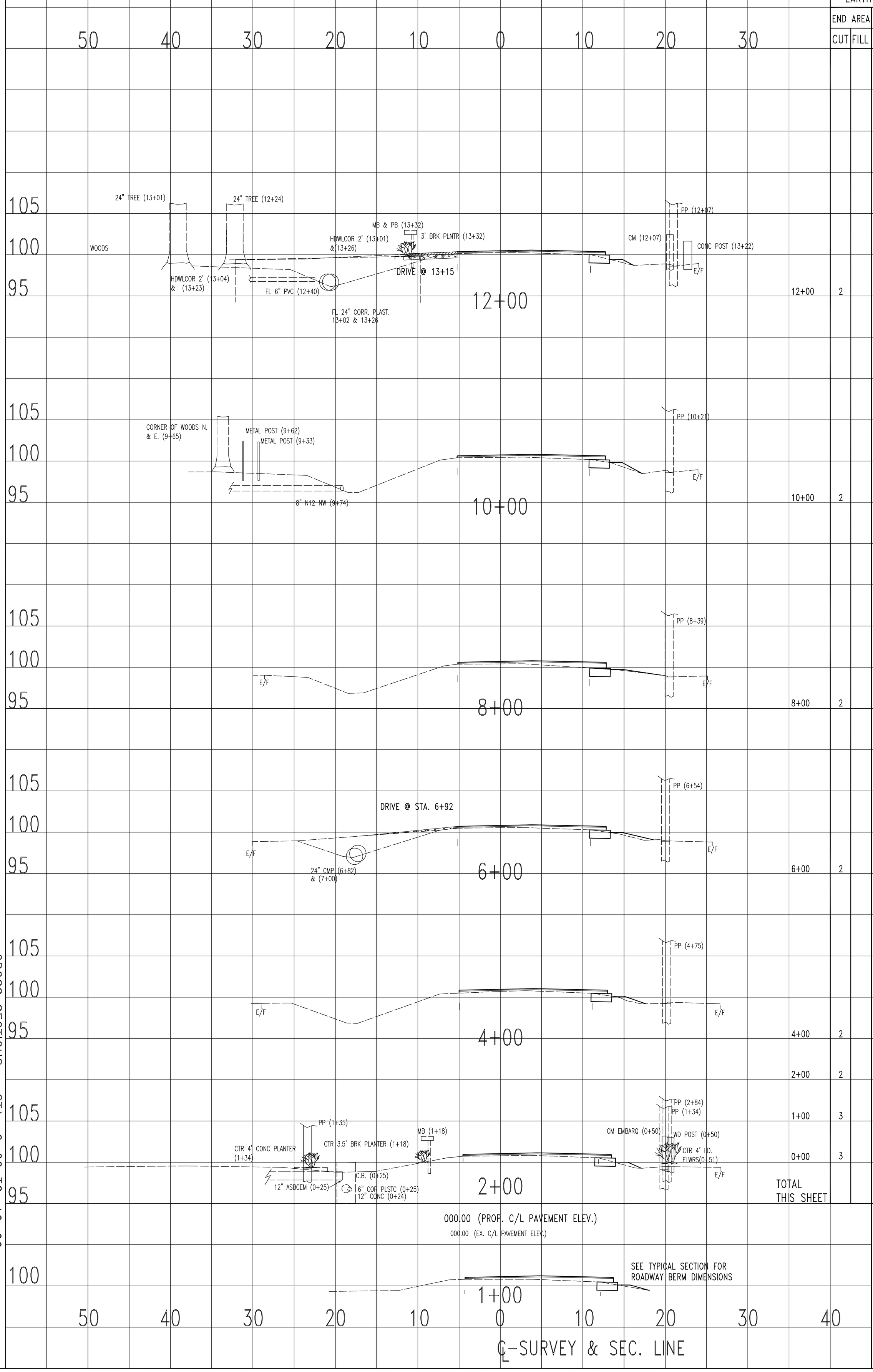

EARTHWORK

	END AREA		VOLUME	
	CUT	FILL	CUT	FILL
12+00	2			
			15	
10+00	2			
			15	
8+00	2			
			15	
6+00	2			
			15	
4+00	2			
			15	
2+00	2			
			11	
1+00	3			
			11	
0+00	3			
TOTAL THIS SHEET			97	0

T.R. V
BETWEEN ROADS 16 & 15
ROAD & DRAINAGE IMPROVEMENTS

5/8

G:/1R13/ROADS/V-16_15/XS1

HENRY COUNTY ENGINEER

FULL CROSS SECTION

CROSS SECTIONS - STA. 14+00 TO 24+00

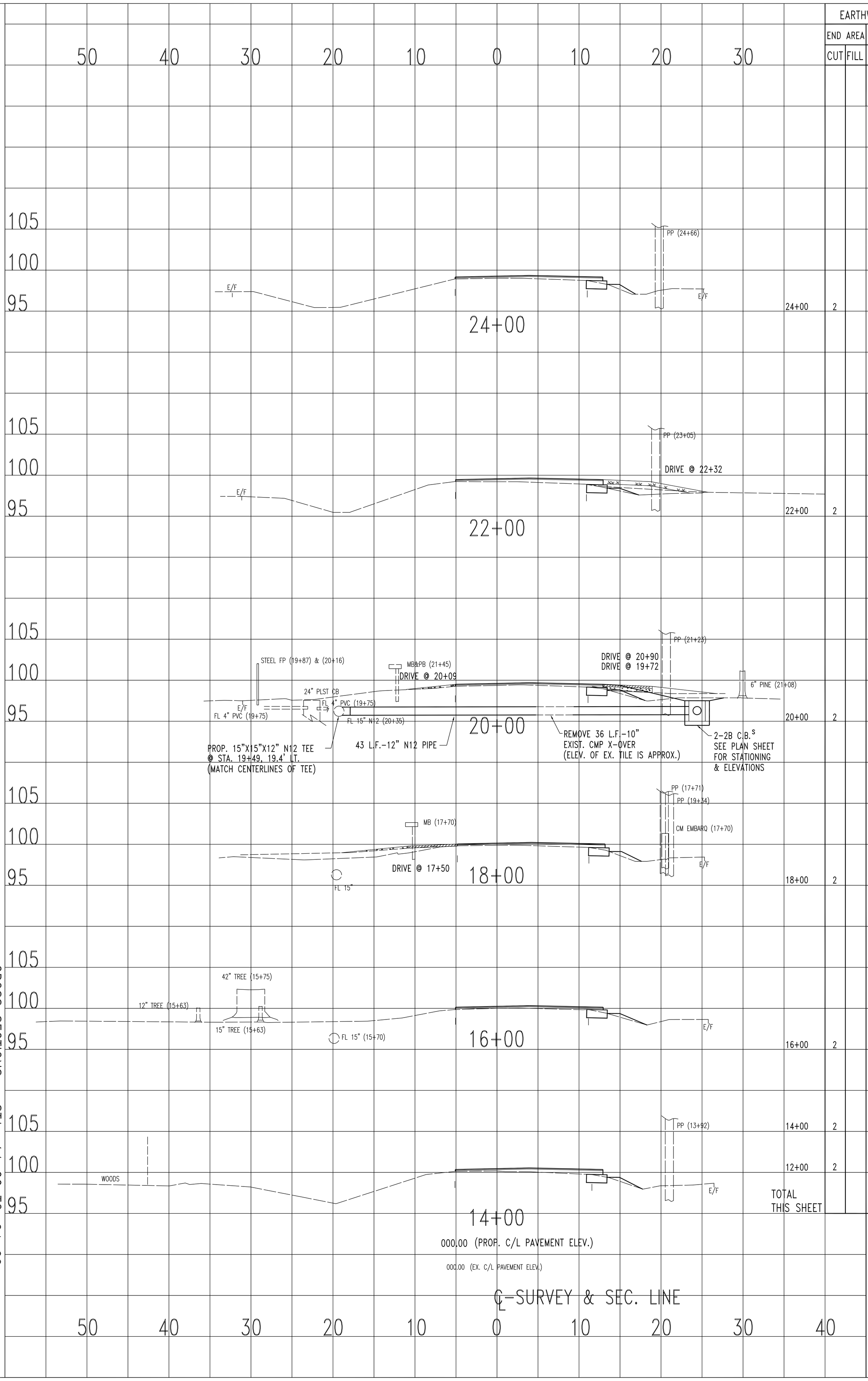

EARTHWORK			
END AREA		VOLUME	
CUT	FILL	CUT	FILL
2			
		15	
2			
		15	
2			
		15	
2			
		15	
2			
		15	
2			
		15	
2			
TOTAL THIS SHEET		90	0

T.R. V
BETWEEN ROADS 16 & 15
ROAD & DRAINAGE IMPROVEMENTS

6/8

C:/1R13/ROADS/V-16_15/XS2

HENRY COUNTY ENGINEER

FULL CROSS SECTION

CROSS SECTIONS - STA. 26+00 TO 38+00

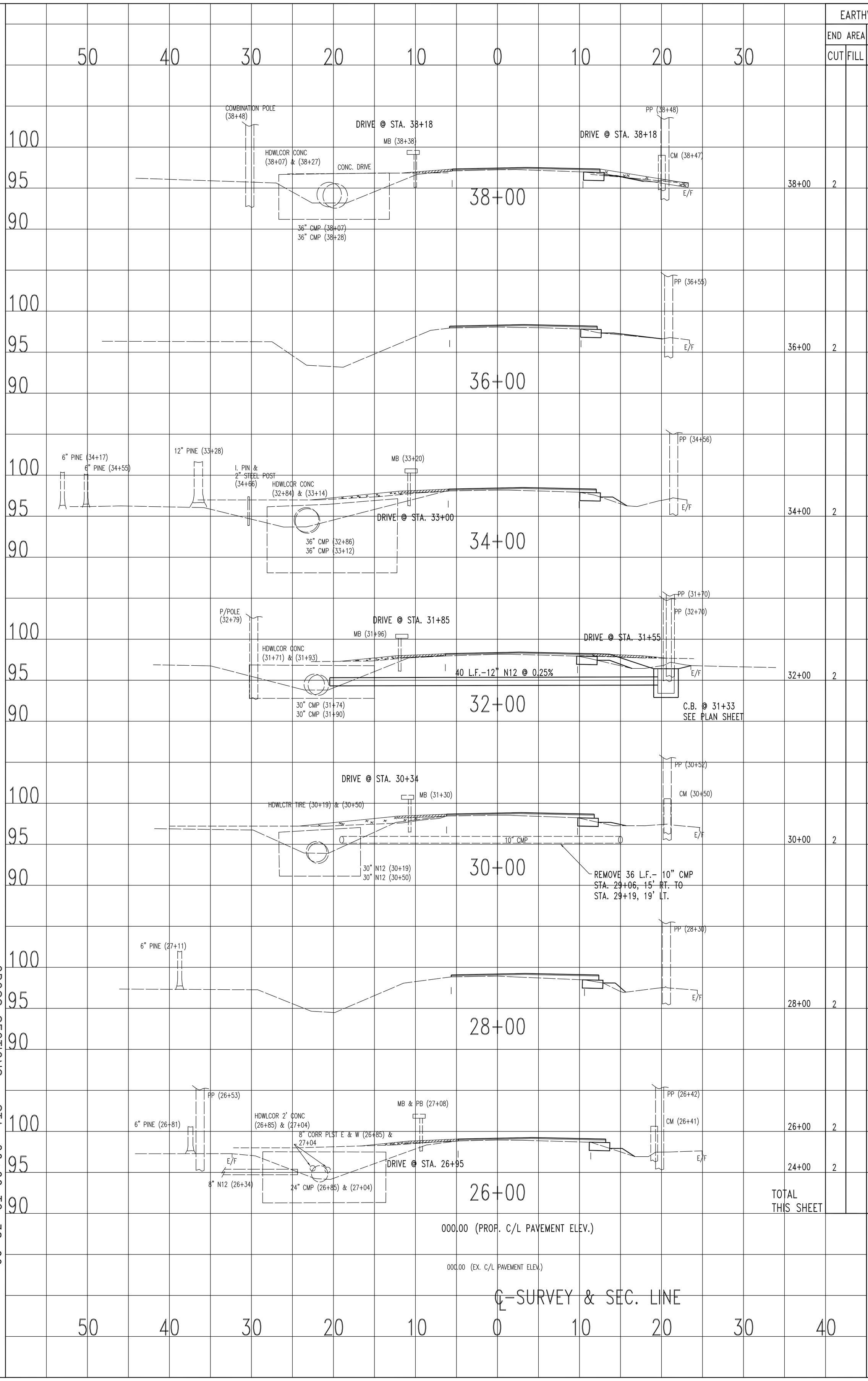

EARTHWORK			
END AREA		VOLUME	
CUT	FILL	CUT	FILL
		15	
38+00	2		
		15	
36+00	2		
		15	
34+00	2		
		15	
32+00	2		
		15	
30+00	2		
		15	
28+00	2		
		15	
26+00	2		
		15	
24+00	2		
TOTAL THIS SHEET		105	0

T.R. V
BETWEEN ROADS 16 & 15
ROAD & DRAINAGE IMPROVEMENTS

7/8

G:/1R13/ROADS/V-16_15/XS3

HENRY COUNTY ENGINEER

FULL CROSS SECTION

CROSS SECTIONS - STA. 40+00 TO 52+00

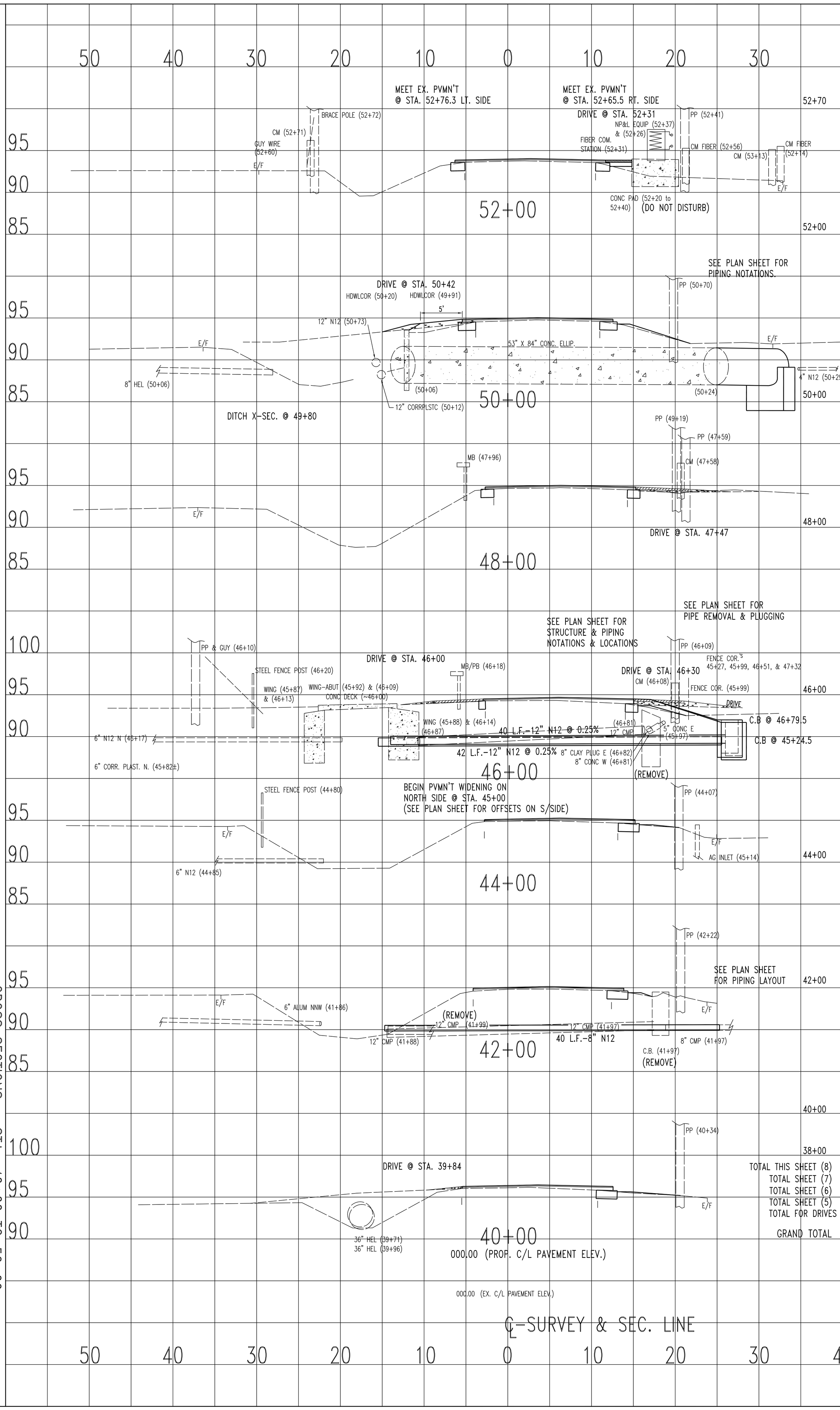

	EARTHWORK			
	END AREA		VOLUME	
	CUT	FILL	CUT	FILL
52+70	3			
			8	
52+00	3			
			26	
50+00	4			
			26	
48+00	3			
			19	
46+00	2			
			15	
44+00	2			
			15	
42+00	2			
			15	
40+00	2			
38+00	2		15	
TOTAL THIS SHEET (8)			139	0
TOTAL SHEET (7)			105	0
TOTAL SHEET (6)			90	0
TOTAL SHEET (5)			97	0
TOTAL FOR DRIVES			4	
GRAND TOTAL			435	0

T.R. V
BETWEEN ROADS 16 & 15
ROAD & DRAINAGE IMPROVEMENTS

8
8

G:/1R13/ROADS/V-16_15/XS4