HENRY COUNTY
DEPARTMENT OF HIGHWAYS
BRIDGE G-16.50
STATE OF OHIO

CONVENTIONAL SIGNS

Township Line
Section Line
Center Line
Property Line — PL
Railroad
Fence Line (existing)
Guardrail (existing)
Trees Stumps
Utility Poles: Telephone Power
Light Brace

County Line
Corporation Limits
Construction Limits
Right of Way — R/W
Underground Utilities
(proposed)
(proposed)
(to be removed)

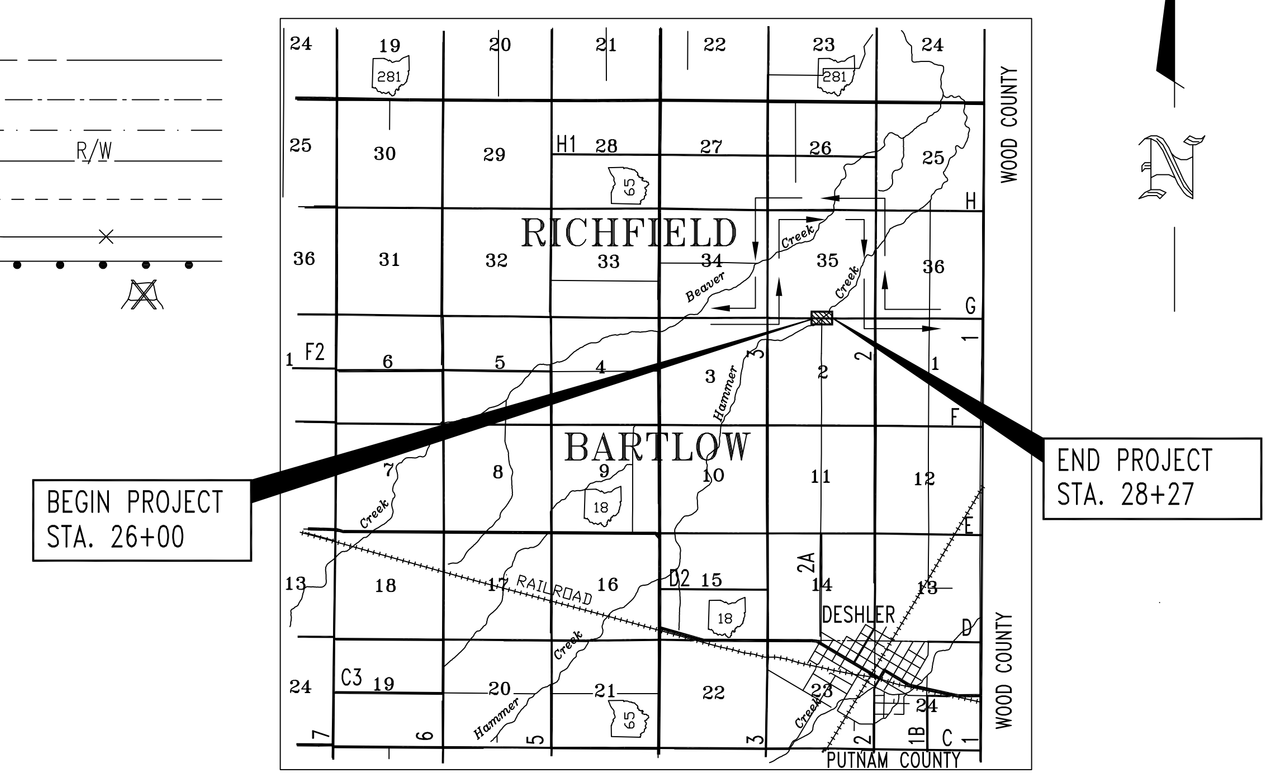

LOCATION MAP

1 1/2 0 1 2 3 4
SCALE IN MILES

Detour
Portion to be improved
State and U.S. Routes — SR US
County and Township Roads

SCALES

Plan — 0' 10' 20' 30' 40' 50'

Profile __ Horizontal 0' 20' Vertical 0' 5'

Cross Section _ Horz. 0' 5' Vertical 0' 5'

2008 SPECIFICATIONS

The Standard Specifications of the Ohio Department of Transportation, including changes and supplemental specifications, listed in the proposal shall govern this improvement.

I hereby approve these plans and declare that the making of this improvement will require the closing of the highway and that the necessary lights and signs shall be maintained.

Approved _____
Date _____ Henry County Engineer

Approved _____
Date _____ Henry County Commissioner

Approved _____
Date _____ Henry County Commissioner

Approved _____
Date _____ Henry County Commissioner

INDEX OF SHEETS

TITLE SHEET 1
GENERAL NOTES 2
TYPICAL SECTIONS & STRUCTURE DETAILS 3
GENERAL SUMMARY & SUB SUMMARY 4
PLAN AND PROFILE 5
CROSS SECTIONS 6

UNDERGROUND UTILITIES
2 WORKING DAYS
BEFORE YOU DIG
CALL 800-362-2764
OHIO UTILITY PROTECTION SERVICE
NON-MEMBERS
MUST BE CALLED DIRECTLY

SUPPLEMENTAL PRINTS OF STANDARD CONSTRUCTION DRAWINGS				
GR.-1.1	5-6-91			
GR. 2.1	1-16-04			
GR. 2.2	4-18-03			
DM-1.1	7-19-02			
MT-101.60	7-1-92			

SUPPLEMENTAL SPECIFICATIONS		
820	6-14-95	
944	12-07-95	

Plans Prepared By
HENRY COUNTY ENGINEER'S OFFICE
NAPOLEON, OHIO

DEPARTMENT OF HIGHWAYS
HENRY COUNTY, OHIO

TITLE SHEET

BRIDGE NO. HEN-G-16.50
OVER HAMMER CREEK
BARTLOW/RICHFIELD TWP.

Designed:	Drawn:	Checked:	File Name:
HEN. CO. ENG.	S.J.K.	R.L.G.	c:\R13\BRIDGES\G-16.50\TITLESHEET

GENERAL NOTES

ELEVATION DATUM
All elevations are based on USGS datum.

EROSION CONTROL
ITEM 601 is provided in the plans for erosion control. Rock of a stable nature will not be removed in order to place this item. The Engineer shall check and non-perform quantities or adjust locations and quantities for this item where indicated by field conditions during construction.

UTILITY OWNERSHIP
The following utilities and owners are located within the work limits of this project.

ELECTRIC: HANCOCK-WOOD ELECTRIC CO-OP, INC.
P.O. BOX 190
NORTH BALTIMORE, OHIO 45872
419/257-5015

TELEPHONE: CENTURYLINK (FORMERLY EMBARQ)
375 E. RIVERVIEW
NAPOLEON, OH. 43545
419/599-4024

ITEM 603
Payment for manufactured end sections, coupling bands, precast wingwalls and footings shall be included in the unit price bid for each conduit under this item.

Where plans provide for proposed conduit to be connected to, or to cross either over or under an existing sewer, it shall be the responsibility of the Contractor to locate the existing pipe both as to line and grade before laying the proposed conduit.

Payment for all operations described above shall be included in the unit price bid for the pertinent 603 conduit items.

Immediately after placement of any conduits, the Contractor shall construct the end treatments required by the plans at both the outlet and inlet ends. This shall include headwalls, wingwalls, end sections, concrete riprap, rock channel protection, sodding, etc.

UNDERGROUND UTILITIES
The locations of underground utilities shown on the plans are as obtained from the owners of the utility as required by Section 153.64 ORC.

SEEDING
To be performed by county forces.

ANIMAL GUARDS
Animal guards shall be provided at the outlet of all pipes which are to be constructed by the Contractor, as per Standard Construction Drawing DM-1.1, except when they outlet into a drainage structure. Payment for the animal guards shall be included in the price bid for Item 603.

INGRESS AND EGRESS TO DRIVES
Ingress and egress to all residential drives shall be maintained at all times during the construction of this project. Temporary closures of any drives shall require permission from the Engineer prior to closure and shall be held to as short a period of time as is necessary.

CONTINGENCY QUANTITIES
The Contractor shall not order materials or perform work listed in the GENERAL SUMMARY for items designated by plan note to be used "AS DIRECTED BY ENGINEER" unless authorized by the Engineer. The actual work locations and quantities used at the Engineer's discretion shall be made a matter of record by incorporation into the final change order governing completion of this project.

LOCATION OF GUARDRAIL
The locations of guardrail runs, as shown in these plans, are subject to adjustment prior to final acceptance. The Engineer shall be satisfied that all installations will afford maximum protection for traffic.

DETOURS
All necessary signs and sign supports including erecting, maintaining and removing the signs and sign supports shall be provided by the Contractor for the required project detour, as indicated on Sht. 1.

Signs and sign supports shall be as detailed in the Ohio Manual of Uniform Traffic Control Devices. Payment for providing, erecting, maintaining and removing signs and sign supports shall be included in the lump sum price bid for ITEM 614, MAINTAINING TRAFFIC.

LIGHTS AND SIGNS AT ADJACENT INTERSECTIONS
The Contractor shall, in addition to the general requirements of ITEM 614 on this project, perform the following:

Provide, erect, and maintain standard 48" x 30" "ROAD CLOSED" signs, sign supports, and lights at the following locations during the period in which the affected road is closed to traffic:

1. Int. T.R. 3 & C.R. G
2. Int. C.R. G & C.R. 2

Sign supports and lights for "ROAD CLOSED" signs shall be as detailed in the Ohio Manual of Uniform Traffic Control Devices. Payment for providing, erecting, maintaining, and removing lights, signs, and sign supports shall be included in the lump sum price bid for ITEM 614, MAINTAINING TRAFFIC.

APPEARANCE OF BRIDGE
The Contractor shall be responsible for the removal of all foreign material such as waterproofing primer or other asphaltic materials, as soon as practical from the fascia beams and/or wingwalls.

REMOVAL AND DISPOSAL OF EXISTING BRIDGE
The existing bridge shall be removed and, at the Contractor's option, existing concrete and stone removed may be used as embankment protection material, as directed by the Engineer, providing that the material meets the gradation requirements of Section 601.08. Any protruding reinforcing steel shall be burned off at the surface of the concrete. Unusable masonry and other debris shall be disposed of as per Section 202.02.

DESIGN DATA FOR BRIDGE
Design Loading: HL-93 (LRFD)

WATERPROOFING MEMBRANE
Refer to ODOT Proposal Note 445-91 with the following revision.
The paragraph titled "Description" shall read:

This item shall consist of furnishing all necessary labor, materials and equipment to prepare the surface and place a waterproof TYPE 3, 36" wide membrane over the top surface and a TYPE 2, 12" wide membrane over the vertical joints. The joint between the wingwalls and the sides of the three sided structure to be covered by a 36" wide membrane. The membrane shall extend a minimum of 2 feet down each side and overlap the membrane covering the vertical joints.

ALLOWABLE SOIL BEARING PRESSURE
The allowable soil bearing pressure is 2,500 p.s.f.

PROPOSED STRUCTURE

ADDITIONAL EMBANKMENT/BACKFILL MATERIAL
Lump Sum bid for ITEM 603, PRECAST CONCRETE BOX, shall include any necessary embankment or backfill material required between the Proposed Structure and the excavation limits from ITEM 202, Structure Removed.

CAST IN PLACE ALTERNATE
The Contractor may cast in place the wingwalls and footings in accordance with the STANDARD TABLE shown on the TYPICAL SECTION SHEET

ITEM 603 CONDUIT, TYPE A, 706.051
Lump Sum bid shall also include all Footings & Wingwalls (As Per Plan)

REINFORCING STEEL
All reinforcing steel used in footings and wingwalls shall be GRADE 60 and EPOXY COATED If Cast In Place Method Is Used. Epoxy Coating to conform to item 709.00

DEPARTMENT OF HIGHWAYS
HENRY COUNTY, OHIO

GENERAL NOTES

BRIDGE NO. HEN G-16.50
OVER HAMMER CREEK
BARTLOW/RICHFIELD TWP.

Designed:	Drawn:	Checked:	File Name:
HEN. CO. ENG.	S.J.K.	R.L.G.	C:\PLT\BRIDGES\G-16.50\GEN-NOTES

* PAVEMENT WIDTH VARIES FROM 17.3' @ STA. 26+50 TO 18.0' @ STA. 26+75 & FROM 18.0' @ STA. 27+50 TO 16.8' @ STA. 28+00

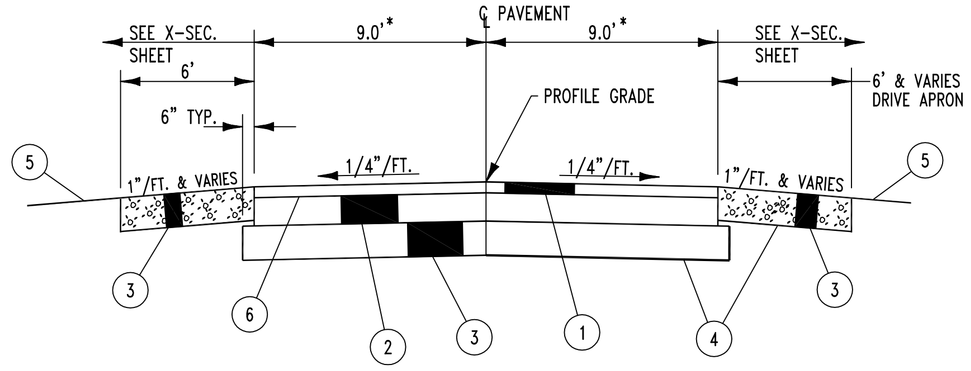

LEGEND

1. ITEM 448, 1 1/2" ASPHALT CONCRETE SURFACE COURSE
2. ITEM 301, 5" ASPHALT CONCRETE BASE
3. ITEM 304, 6" AGGREGATE BASE
4. ITEM 204, SUBGRADE COMPACTION
5. ITEM 659, SEEDING & MULCHING (TO BE DONE BY COUNTY FORCES)
6. ITEM 407, TACK COAT, APPLIED AT THE RATE OF 0.05 GAL/S.Y.

TYPICAL PAVEMENT SECTION

NOT TO SCALE

26+50 TO 26+95.18 & 27+37.58 TO 28+00 (C/L PAVEMENT)
SEE HALF TRANSVERSE SECTION STA. 26+95.18 TO 27+37.58 (C/L PAVEMENT)

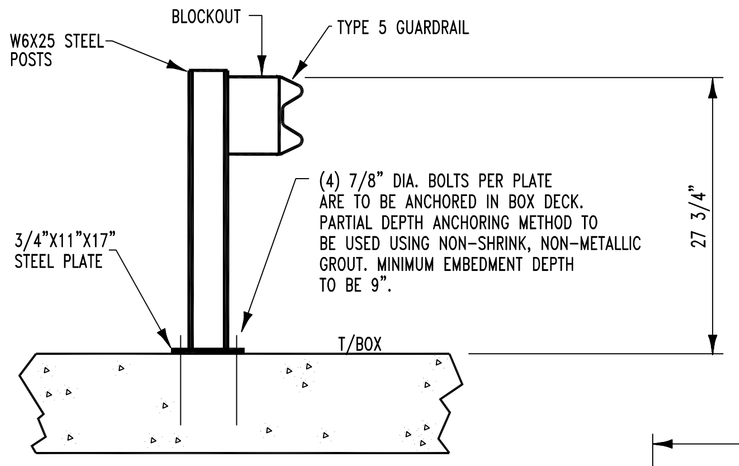

SEE STD. DWG. GR-2.2 IN ODOT ROADWAY STD. CONST. DWGS.

GUARDRAIL DETAIL

NOT TO SCALE

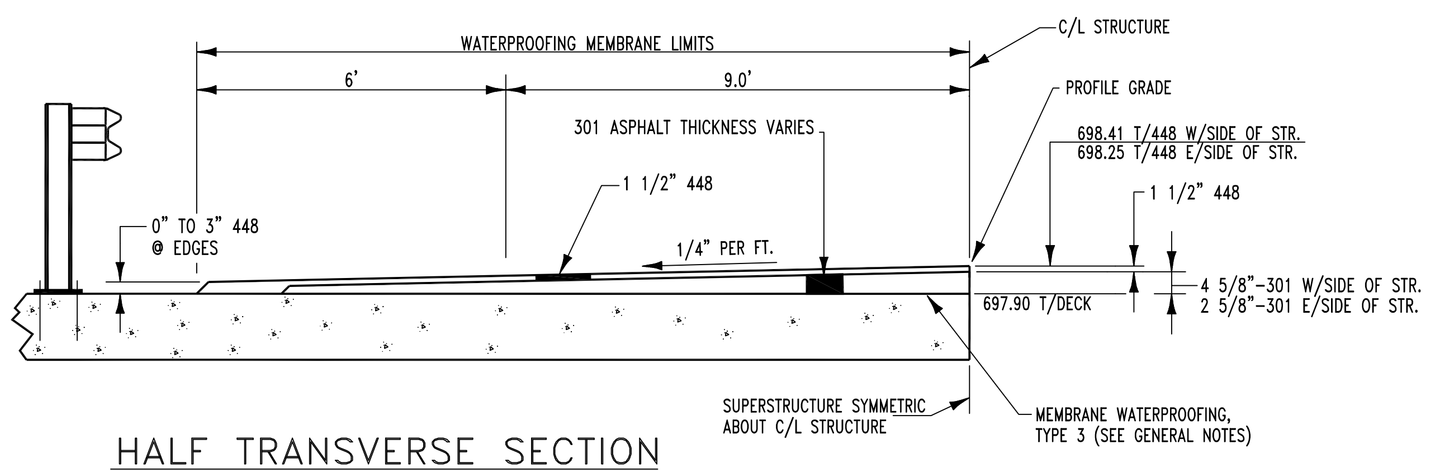

HALF TRANSVERSE SECTION

NOT TO SCALE

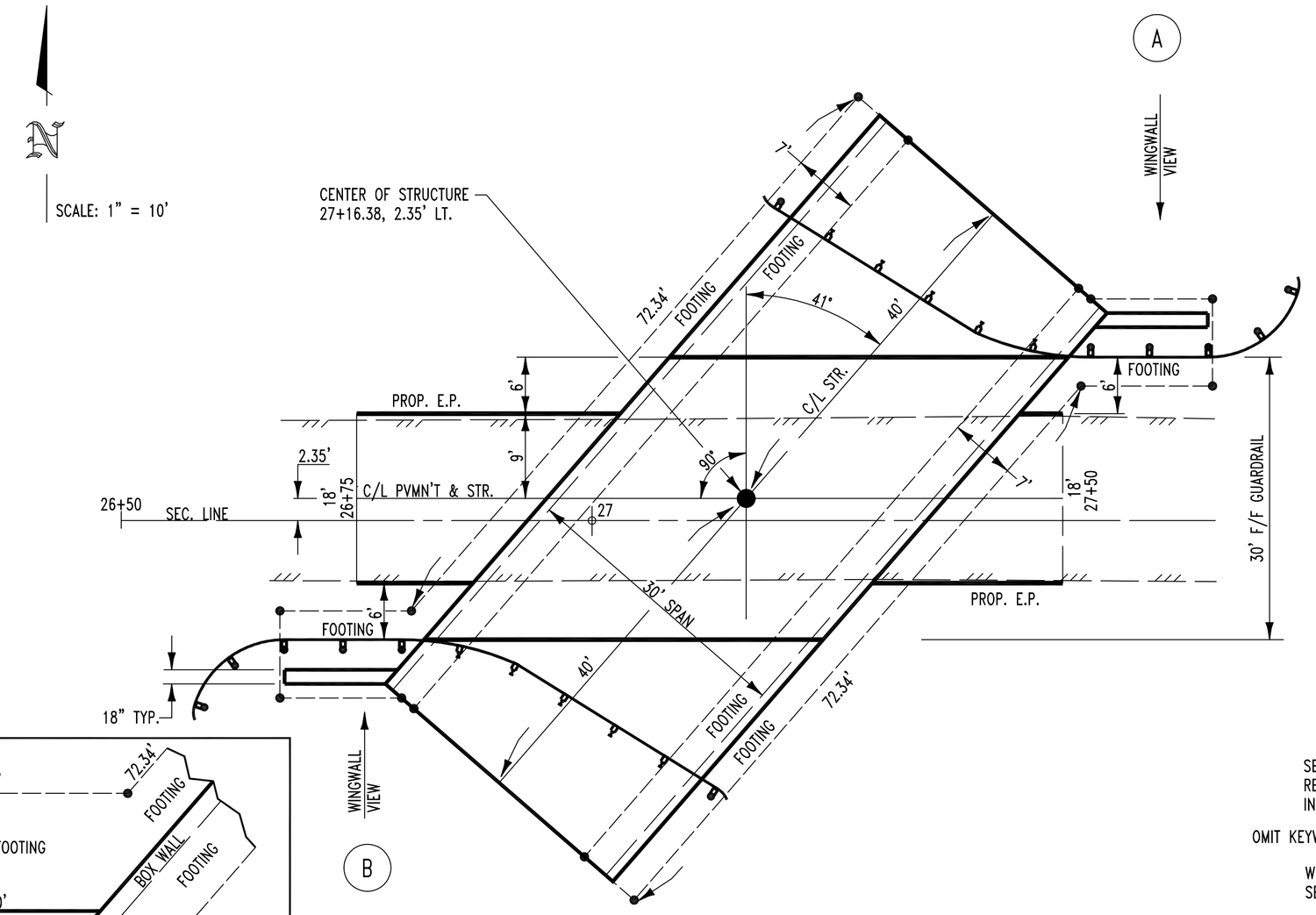

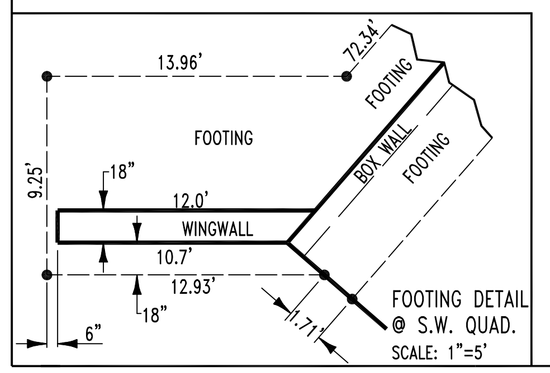

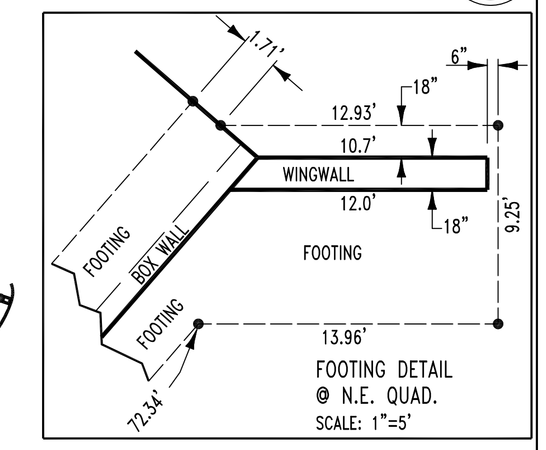

SEE TABLE BELOW FOR REINFORCING STEEL LAYOUT IN WINGWALLS

OMIT KEYWAY ON OUTSIDE FASCIA SECTIONS

WIDTH & NUMBER OF PRECAST SECTIONS SHALL BE PER MANUFACTURER

STRUCTURE DETAIL & LAYOUT

SCALE: 1" = 10'

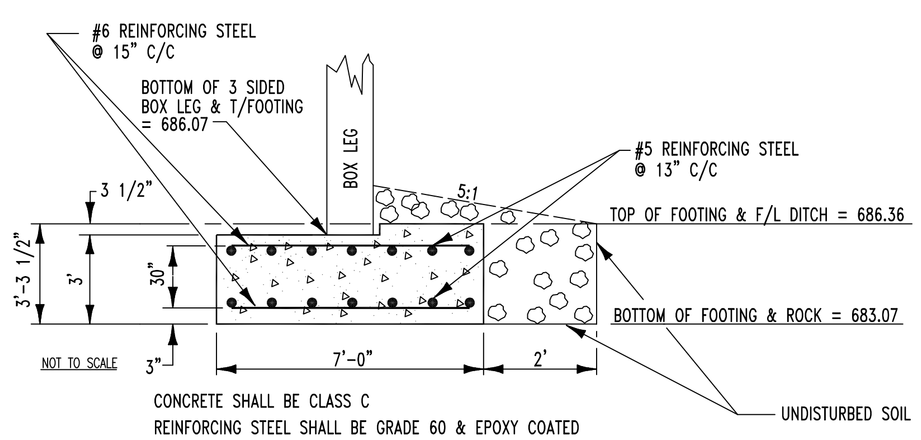

CONCRETE SHALL BE CLASS C
REINFORCING STEEL SHALL BE GRADE 60 & EPOXY COATED

FOOTING ELEVATION & REINFORCING STEEL LAYOUT FOR BOX SECTION (IF CAST IN PLACE METHOD IS USED)

SEE CAST IN PLACE ALTERNATE NOTE ON GENERAL NOTES SHEET

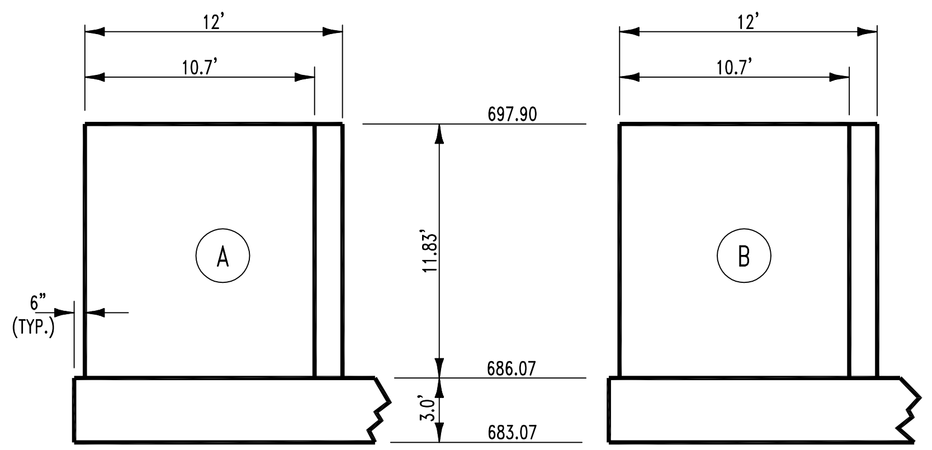

REINFORCING STEEL LAYOUT TO BE PER TABLE
IF CAST IN PLACE METHOD IS USED. REINFORCING STEEL SHALL BE GRADE 60 & EPOXY COATED
ALL CONCRETE TO BE CLASS C
PROVIDE 1" X 45° CHAMFER ON ALL EXPOSED EDGES
SEE CAST IN PLACE ALTERNATE NOTE ON GENERAL NOTES SHEET

WINGWALL DETAILS

NO SCALE

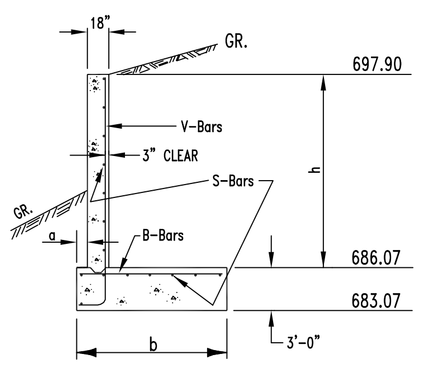

Note: Spacing of S-Bars is approx. Use tabular number of bars and space evenly with 2" cover.

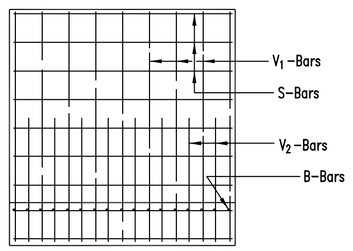

h	a	b	t	V-Bars		Lengths		B-Bars			S-Bars	
(ft.)	(in.)	(ft.-in.)	(in.)	Size	Spacing	V1 Bars	V2 Bars	Size	Spacing	Length	Size	Spacing
5	6"	3-6	12	#3	10"	7'-8"		#3	10"	3'-2"	#3	12"
6	6"	4-3	12	#4	10"	8'-9"		#4	10"	3'-10"	#3	12"
7	6"	5-0	12	#4	7"	9'-8"		#4	7"	4'-8"	#3	12"
8	6"	6-0	12	#5	7" *	10'-8"	7'-0"	#5	9"	5'-8"	#3	12"
9	6"	7-0	15	#5	7" *	12'-0"	7'-8"	#5	7"	6'-8"	#3	12"
10	6"	7-9	15	#6	9" *	13'-0"	7'-10"	#6	9"	7'-4"	#3	12"
11	12"	8-6	18	#6	9" *	14'-6"	9'-3"	#6	7"	8'-0"	#4	12"
12	18"	9-3	18	#6	9" *	16'-0"	10'-6"	#7	9"	8'-9"	#4	12"
13	24"	10-0	18	#7	9" *	17'-6"	11'-9"	#7	7"	9'-6"	#4	12"
14	30"	11-0	21	#7	9" *	19'-3"	13'-0"	#8	9"	10'-6"	#5	12"
15	36"	12-6	21	#8	9" *	20'-9"	16'-0"	#8	7"	12'-0"	#5	12"
16	42"	14-6	24	#8	9" *	22'-6"	19'-0"	#8	6"	14'-0"	#5	12"

* SPACING BETWEEN V1 & V2 BARS

WINGWALL NOTES:

IF CAST IN PLACE METHOD IS USED. REINFORCING STEEL SHALL BE GRADE 60 & EPOXY COATED
ALL CONCRETE TO BE CLASS C
PROVIDE 1" X 45° CHAMFER ON ALL EXPOSED EDGES
SEE CAST IN PLACE ALTERNATE NOTE ON GENERAL NOTES SHEET

DEPARTMENT OF HIGHWAYS
HENRY COUNTY, OHIO

TYPICAL SECTIONS STRUCTURE DETAILS

BRIDGE NO. HEN G-16.50
OVER HAMMER CREEK
BARTLOW/RICHFIELD TWP.

Designed:	Drawn:	Checked:	FileName
HEN. CO. ENG.	SK	R.L.G.	C:\R13\BRIDGES\G-16.50\TYPICAL

GENERAL SUMMARY

ITEM	ITEM EXT.	GRAND TOTAL	UNIT	DESCRIPTION
				ROADWAY
201		1	LUMP	CLEARING & GRUBBING
202		93	LIN. FT.	PIPE REMOVED, 24" & UNDER
202		1	LUMP	STRUCTURE REMOVED (G-16.50) OVER 20' SPAN
203		415	CU. YD.	EXCAVATION (INCLUDES FULL DEPTH PAVEMENT REMOVAL AS SHOWN ON PLAN & X-SEC. SHEET)
203		102	CU. YD.	EMBANKMENT
204		422	SQ. YD.	SUBGRADE COMPACTION
517		75	LIN. FT.	RAILING, TYPE 5 W/6" STEEL POSTS & BLOCKOUTS, STEEL PLATES & MOUNTING HARDWARE. (AS PER PLAN)
606		50	LIN. FT.	GUARDRAIL, TYPE 5, (AS PER PLAN)
				EROSION CONTROL
601		101	CU. YD.	ROCK CHANNEL PROTECTION, TYPE D W/O FILTER (AS PER PLAN)
659		———	M. GAL.	WATER (TO BE PERFORMED BY COUNTY FORCES)
659		———	SQ. YD.	SEEDING & MULCHING (TO BE PERFORMED BY COUNTY FORCES)
659		———	TON	COMMERCIAL FERTILIZER (TO BE PERFORMED BY COUNTY FORCES)
				DRAINAGE
503		1	LUMP	UNCLASSIFIED EXCAVATION (INCLUDES ANY CUTS & FILLS REQUIRED TO SATISFY ANY OSHA TRENCH REQUIREMENTS)
512		43	SQ. YD.	TYPE 2, MEMBRANE WATERPROOFING (SEE GENERAL NOTES, SHEET 2)
512		160	SQ. YD.	TYPE 3, MEMBRANE WATERPROOFING (SEE GENERAL NOTES, SHEET 2)
603		50	LIN. FT.	8" CONDUIT, TYPE E, 707.32
603		10	LIN. FT.	10" CONDUIT, TYPE E, 707.33
603		10	LIN. FT.	12" CONDUIT, TYPE E, 707.32
603		75	LIN. FT.	18" CONDUIT, TYPE D, 707.33
603		1	LUMP	CONDUIT, TYPE A, 706.051
				PRECAST REINFORCED CONC. 3 SIDED FLAT TOPPED CULVERT ON CONC. FOOTINGS.
				30' SPAN X 10.5' RISE X 80 L.F. – 41° SKEW, TO INCLUDE ALL FOOTINGS & WINGWALLS (AS PER PLAN)
				PAVEMENT
301		37	CU. YD.	ASPHALT CONCRETE BASE
304		69	CU. YD.	AGGREGATE BASE
407		18	GAL.	TACK COAT (APPLIED AT THE RATE OF 0.05 GAL./S.Y.)
448		15	CU. YD.	ASPHALT CONCRETE SURFACE COURSE
SPEC.		2	EACH	BUTT JOINTS (34 L.F.)
				MISCELLANEOUS
614		1	LUMP	MAINTAINING TRAFFIC
623		1	LUMP	CONSTRUCTION LAYOUT STAKES
624		1	LUMP	MOBILIZATION
103.05		1	LUMP	CONTRACT PERFORMANCE & PAYMENT BOND

SUB-SUMMARY

REF. NO.	STATION FROM	STATION TO	SIDE	ROAD	202 PIPE REMOVED 24" & UNDER LIN. FT.	202 STRUCTURE REMOVED G-16.50 OVER 20' SPAN LUMP	601 ROCK CHANNEL PROTECTION, TYPE D W/O FILTER (AS PER PLAN) CU. YD.	603 8" CONDUIT TYPE E 707.32 LIN. FT.	603 10" CONDUIT TYPE E 707.33 (AS PER PLAN) LIN. FT.	603 12" CONDUIT TYPE E 707.32 LIN. FT.	603 18" CONDUIT TYPE D 707.33 LIN. FT.	603 CONDUIT, TYPE A 706.051 30' SPAN X 10.5' RISE X 80 L.F. 41° SKEW PRECAST REINFORCED CONC. 3 SIDED FLAT TOPPED CULVERT ON CONC. FOOTINGS & WINGWALLS (AS PER PLAN) LUMP	517 RAILING, TYPE 5 W/6" STEEL POSTS & BLOCKOUTS, STEEL PLATES & MOUNTING HARDWARE (AS PER PLAN) LIN. FT.	606 GUARDRAIL TYPE 5 (AS PER PLAN) LIN. FT.	SHEET NUMBER
1R	26+86	27+10	LT.	G	24										5/6
2R	26+72	27+62	LT&RT	G		1									5/6
3R	27+68	27+77	LT.	G	9										5/6
4R	27+24	27+72	RT.	G	48										5/6
5R	26+96	27+05	RT.	G	12										5/6
1D	26+86	27+29	LT.	G				50							5/6
2D	26+95.18 (C/L PVMN'T.)	27+37.58 (C/L PVMN'T.)	LT&RT	G								1			3/5/6
3D	27+69	27+77	LT	G					10						5/6
4D	27+01	27+74	RT.	G							75				5/6
5D	26+96	27+05	RT.	G						10					5/6
1RCP	NORTH SIDE OF STRUCTURE		LT.	G			28								5
2RCP	THRU STRUCTURE		LT&RT	G			54								3/5
3RCP	SOUTH SIDE OF STRUCTURE		RT.	G			19								5
1GR	27+19.57	27+52.96	LT.	G									37.5		3/5/6
	27+52.96	27+74.95	LT.	G										25.0	3/5
2GR	26+57.81	26+79.80	RT.	G										25.0	3/5/6
	26+79.80	27+13.19	RT.	G									37.5		3/5/6
TOTALS					93	1	101	50	10	10	75	1	75	50	

DEPARTMENT OF HIGHWAYS
HENRY COUNTY, OHIO

GENERAL SUMMARY
& SUB-SUMMARY

BRIDGE NO. HEN-G-16.50
OVER HAMMER CREEK
BARTLOW/RICHFIELD TWP.

Designed:	Drawn:	Checked:	File Name
R.L.G	S.J.K	R.L.G	C:\R13\BRIDGES\G-16.50\GEN-SUMM

BR. G-16.50 (5/6)

BARTLOW/RICHFIELD TWP.

Scale: 1"=20'

60' R/W

TYPE "D" ROCK CHANNEL PROTECTION

(18" THICK EXCEPT THRU STRUCTURE)

- (1RCP) 28 C.Y. NORTH SIDE OF STRUCTURE
- (2RCP) 54 C.Y. THRU STRUCTURE
- (3RCP) 19 C.Y. SOUTH SIDE OF STRUCTURE

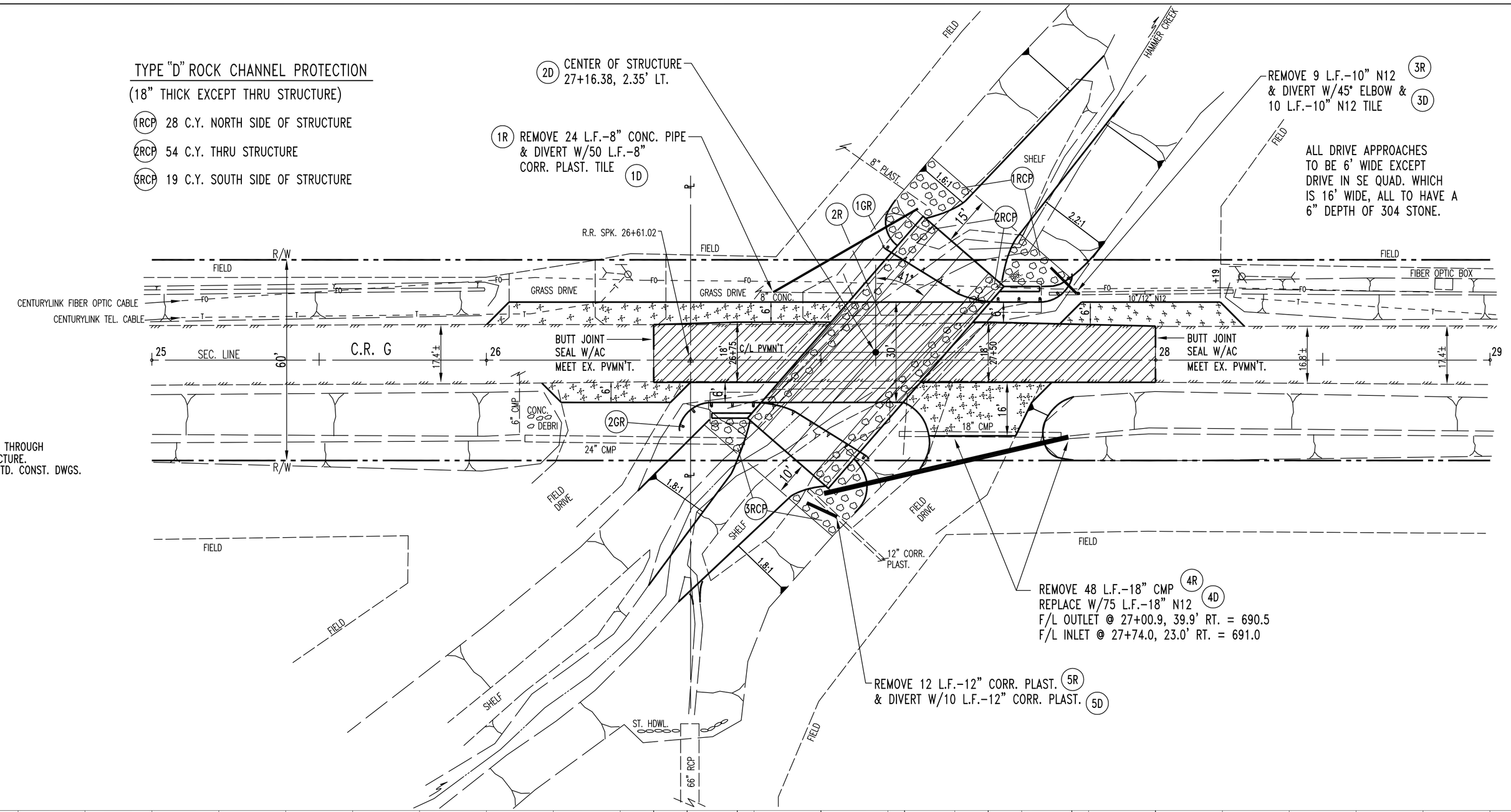

NOTE: SEALING OF EXPOSED CONCRETE SURFACES TO BE PERFORMED BY COUNTY FORCES AT DIRECTION OF ENGINEER AFTER CONTRACTOR HAS LEFT SITE.

GUARDRAIL LIST

NOTE: USE PARTIAL DEPTH ANCHORING AS OPPOSED TO THROUGH BOLTING FOR MOUNTING G/RAIL POSTS TO STRUCTURE. SEE STD. DRAWING GR-2.2 IN ODOT ROADWAY STD. CONST. DWGS.

NORTH SIDE

12.5 L.F.-TYPE 5, 10' RAD. RAIL
12.5 L.F.-TYPE 5, STRAIGHT RAIL
12.5 L.F.-TYPE 5, 30' RAD. RAIL W/6"STEEL POSTS, STEEL PLATES & MOUNTING HARDWARE
25.0 L.F.-TYPE 5, STRAIGHT RAIL W/6"STEEL POSTS, STEEL PLATES & MOUNTING HARDWARE
2 FLARED END SECTIONS

SOUTH SIDE

12.5 L.F.-TYPE 5, 10' RAD. RAIL
12.5 L.F.-TYPE 5, STRAIGHT RAIL
12.5 L.F.-TYPE 5, 30' RAD. RAIL W/6"STEEL POSTS, STEEL PLATES & MOUNTING HARDWARE
25.0 L.F.-TYPE 5, STRAIGHT RAIL W/6"STEEL POSTS, STEEL PLATES & MOUNTING HARDWARE
2 FLARED END SECTIONS

SBM
MAG NAIL @ STA. 25+00, ELEV. = 698.32
MAG NAIL @ STA. 29+00, ELEV. = 697.85

EXIST. SFN-3530744
PROP. SFN-3536238

EXISTING STRUCTURE

TYPE: CONCRETE BEAM SIMPLE W/BANNISTERS
SPAN: 40'
BR. ROADWAY WIDTH: 20'±
APPROACH ROADWAY WIDTH: 18'
ABUTS: CONCRETE GRAVITY
SKEW: 45°
YEAR BUILT: 1930

PROPOSED STRUCTURE

TYPE: PRECAST REINFORCED CONC. 3-SIDED FLAT TOPPED CULVERT ON CONC FOOTINGS
80 L.F.-30' SPAN X 10.5' RISE
ROADWAY WIDTH: 30' F/F GUARDRAIL
DESIGN LOADING: HL-93 (LRFD)
SKEW: 41°
WEARING SURFACE: ASPHALT CONCRETE

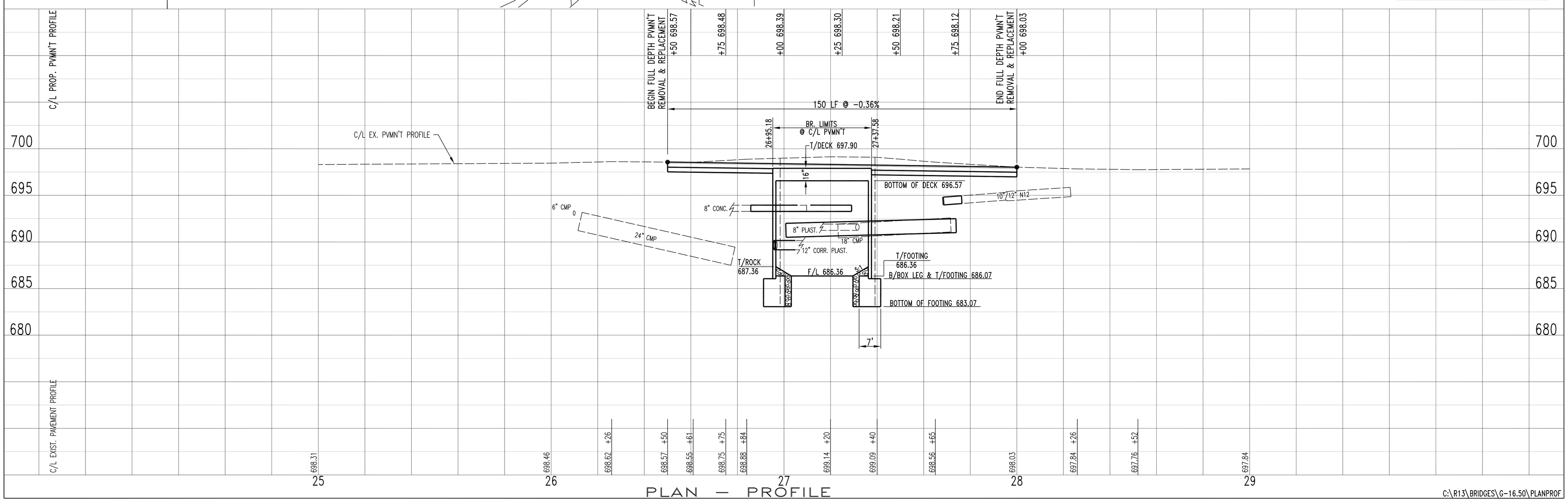

PLAN — PROFILE

C:\R13\BRIDGES\G-16.50\PLANPROF

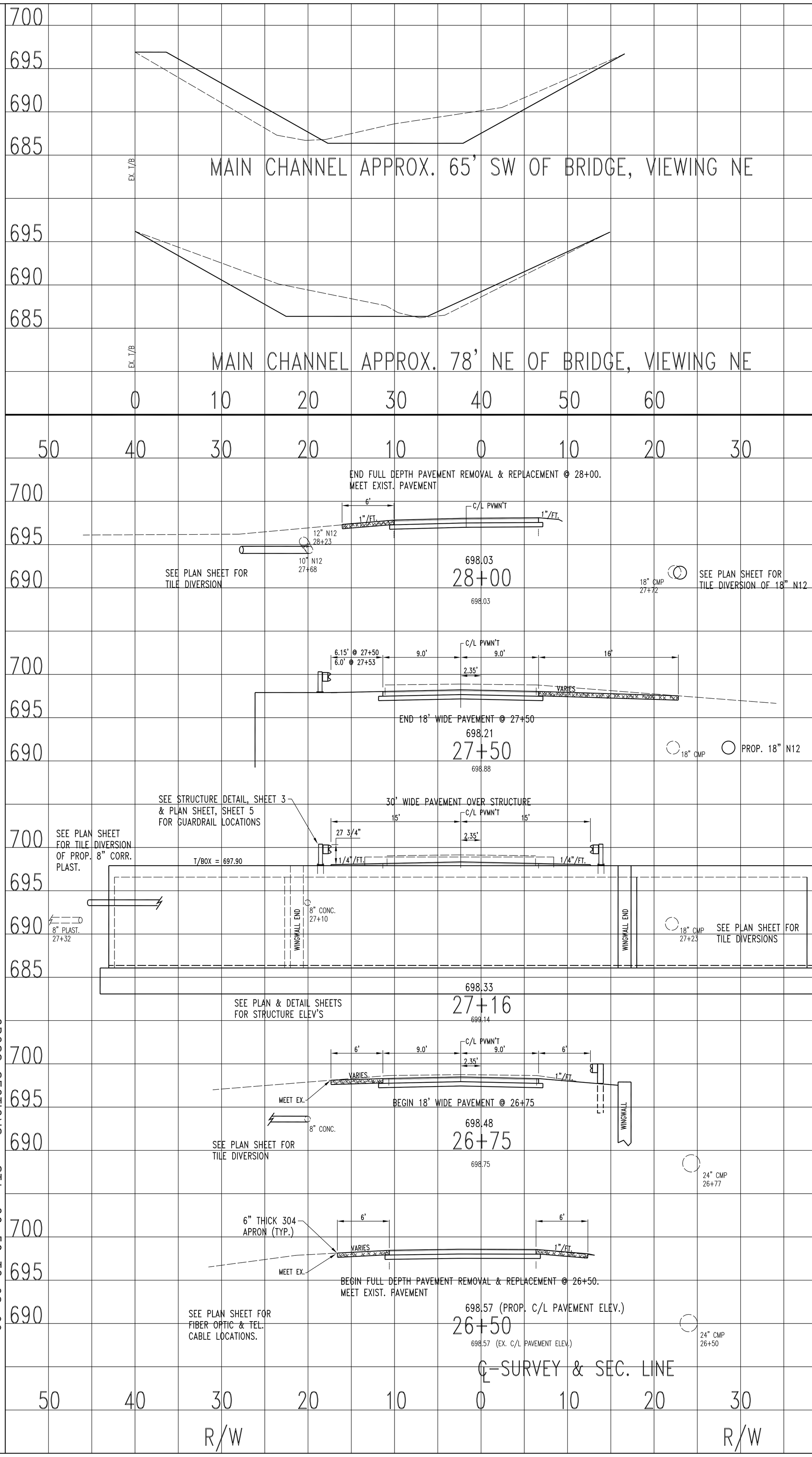

	EARTHWORK			
	END AREA		VOLUME	
	CUT	FILL	CUT	FILL
MAIN CHANNEL SW OF BRIDGE USED 55' LENGTH	57	40	116	81
MAIN CHANNEL NE OF BRIDGE USED 70' LENGTH	60	8	155	21
28+26 LT. SHLD.	3	0		
28+00 LT. SHLD.	3	0	3	0
27+50 LT. SHLD.	3	0	6	0
27+69 RT. SHLD.	14	0		
27+50 RT. SHLD.	14	0	10	0
27+28 RT. SHLD.	14	0	11	0
28+00 ROADWAY	19	0		
27+50 ROADWAY	34	0	49	0
27+43 ROADWAY	34	0	9	0
UNCLASSIFIED EXCAVATION, 26+90 TO 27+43	– –	– –	–	–
26+80 RT. SHLD.	1	0		
26+75 RT. SHLD.	1	0	1	0
26+50 RT. SHLD.	3	0	2	0
26+17 RT. SHLD.	3	0	4	0
26+90 ROADWAY	26	0		
26+75 ROADWAY	26	0	14	0
26+50 ROADWAY	19	0	21	0
27+01 LT. SHLD.	5	0		
26+75 LT. SHLD.	4	0	5	0
26+50 LT. SHLD.	3	0	3	0
26+00 LT. SHLD.	3	0	6	0
TOTAL THIS SHEET			415	102

FULL CROSS SECTION

CROSS SECTIONS - STA. 26+50 TO 28+00

C:\R13\BRIDGES\G-16.50\X-SECT

BRIDGE G-16.50
BARTLOW/RICHFIELD TWP.

6/6