HENRY COUNTY
DEPARTMENT OF HIGHWAYS
BRIDGE 12-18.25
STATE OF OHIO

CONVENTIONAL SIGNS

Township Line
Section Line
Center Line
Property Line
Railroad
Fence Line (existing)
Guardrail (existing)
Trees Stumps
Utility Poles: Telephone Power
Light Brace

County Line
Corporation Limits
Construction Limits
Right of Way
Underground Utilities
(proposed)
(proposed)
(to be removed)

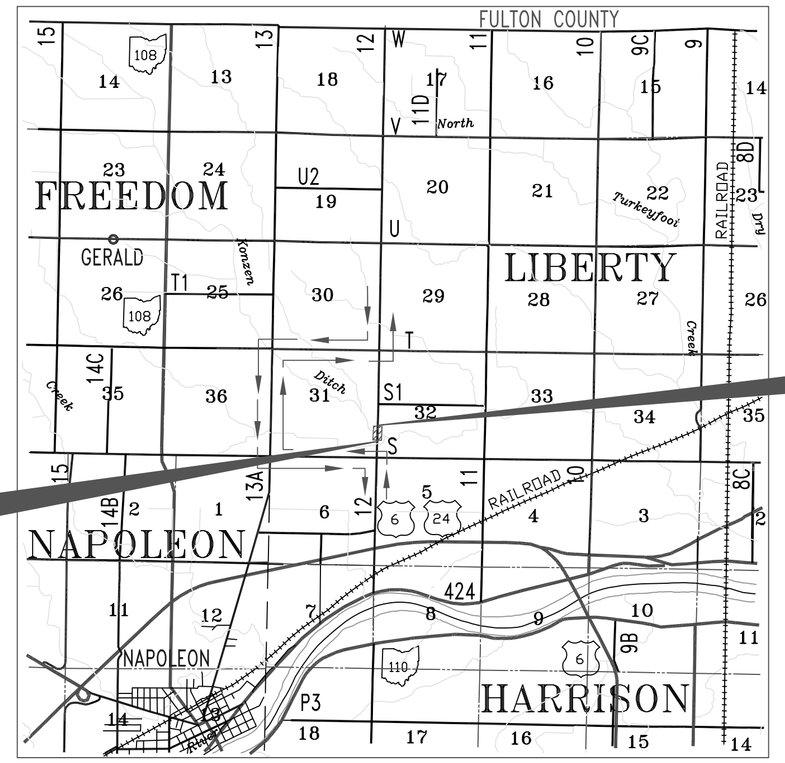

LOCATION MAP

1 1/2 0 1 2 4
SCALE IN MILES

Detour
Portion to be improved
State and U.S. Routes
County and Township Roads

SCALES

Plan 0' 10' 20' 30' 40' 50'
Profile __ Horizontal 0' 20' Vertical 0' 5'
Cross Section _ Horz. 0' 5' Vertical 0' 5'

2008 SPECIFICATIONS

The Standard Specifications of the Ohio Department of Transportation, including changes and supplemental specifications, listed in the proposal shall govern this improvement.

I hereby approve these plans and declare that the making of this improvement will require the closing of the highway and that the necessary lights and signs shall be maintained.

Approved _____
Date _____ Henry County Engineer

Approved _____
Date _____ Henry County Commissioner

Approved _____
Date _____ Henry County Commissioner

Approved _____
Date _____ Henry County Commissioner

INDEX OF SHEETS

TITLE SHEET 1
GENERAL NOTES 2
TYPICAL SECTIONS & STRUCTURE DETAILS 3
GENERAL SUMMARY & SUB SUMMARY 4
PLAN AND PROFILE 5
CROSS SECTIONS 6

UNDERGROUND UTILITIES
2 WORKING DAYS
BEFORE YOU DIG
CALL 800-362-2764
OHIO UTILITY PROTECTION SERVICE
NON-MEMBERS
MUST BE CALLED DIRECTLY

SUPPLEMENTAL PRINTS OF STANDARD CONSTRUCTION DRAWINGS

GR.-1.1	5-6-91
GR. 2.1	1-16-04
GR. 2.2	4-18-03
DBR-2-73	9-15-94
DS-1-92	12-15-94
DBP-1-92	3-23-92
MT-101.60	7-1-92
DM-1.1	7-19-02

SUPPLEMENTAL SPECIFICATIONS

944	12-07-95
820	6-14-95

Plans Prepared By
HENRY COUNTY ENGINEER'S OFFICE
NAPOLEON, OHIO

DEPARTMENT OF HIGHWAYS
HENRY COUNTY, OHIO

TITLE SHEET

BRIDGE NO. HEN-12-18.25
OVER DITCH 1075
LIBERTY TWP.

Designed:	Drawn:	Checked:	File Name:
HEN. CO. ENG.	S.J.K.	R.L.G.	C:\R13\BRIDGES\12-18.25\TITLESHEET

GENERAL NOTES

ELEVATION DATUM
All elevations are based on ASSUMED 100.00 Elevation.

EROSION CONTROL
ITEM 601 is provided in the plans for erosion control. Rock of a stable nature will not be removed in order to place this item. The Engineer shall check and non-perform quantities or adjust locations and quantities for this item where indicated by field conditions during construction.

UTILITY OWNERSHIP
The following utilities and owners are located within the work limits of this project.

ELECTRIC: NAPOLEON LIGHT & POWER DEPT.
255 RIVERVIEW AVE.
NAPOLEON, OHIO 43545
419/599-1235
419/599-2810 (EMERGENCY)

TELEPHONE: CENTURYLINK
375 E. RIVERVIEW
NAPOLEON, OH. 43545
419/599-4024

ITEM 603
Payment for manufactured end sections, coupling bands, precast wingwalls and footings shall be included in the unit price bid for each conduit under this item.

Where plans provide for proposed conduit to be connected to, or to cross either over or under an existing sewer, it shall be the responsibility of the Contractor to locate the existing pipe both as to line and grade before laying the proposed conduit.

Payment for all operations described above shall be included in the unit price bid for the pertinent 603 conduit items.

Immediately after placement of any conduits, the Contractor shall construct the end treatments required by the plans at both the outlet and inlet ends. This shall include headwalls, wingwalls, end sections, concrete riprap, rock channel protection, sodding, etc.

UNDERGROUND UTILITIES
The locations of underground utilities shown on the plans are as obtained from the owners of the utility as required by Section 153.64 ORC.

SEEDING
To be performed by county forces.

ANIMAL GUARDS
Animal guards shall be provided at the outlet of all pipes which are to be constructed by the Contractor, as per Standard Construction Drawing DM-1.1, except when they outlet into a drainage structure. Payment for the animal guards shall be included in the price bid for Item 603.

INGRESS AND EGRESS TO DRIVES
Ingress and egress to all residential drives shall be maintained at all times during the construction of this project. Temporary closures of any drives shall require permission from the Engineer prior to closure and shall be held to as short a period of time as is necessary.

CONTINGENCY QUANTITIES
The Contractor shall not order materials or perform work listed in the GENERAL SUMMARY for items designated by plan note to be used "AS DIRECTED BY ENGINEER" unless authorized by the Engineer. The actual work locations and quantities used at the Engineer's discretion shall be made a matter of record by incorporation into the final change order governing completion of this project.

LOCATION OF GUARDRAIL
The locations of guardrail runs, as shown in these plans, are subject to adjustment prior to final acceptance. The Engineer shall be satisfied that all installations will afford maximum protection for traffic.

DETOURS
All necessary signs and sign supports including erecting, maintaining and removing the signs and sign supports shall be provided by the Contractor for the required project detour, as indicated on Sht. 1.

Signs and sign supports shall be as detailed in the Ohio Manual of Uniform Traffic Control Devices. Payment for providing, erecting, maintaining and removing signs and sign supports shall be included in the lump sum price bid for ITEM 614, MAINTAINING TRAFFIC.

LIGHTS AND SIGNS AT ADJACENT INTERSECTIONS
The Contractor shall, in addition to the general requirements of ITEM 614 on this project, perform the following:

Provide, erect, and maintain standard 48" x 30" "ROAD CLOSED" signs, sign supports, and lights at the following locations during the period in which the affected road is closed to traffic:

1. Int. C.R. S & C.R. 12
2. Int. C.R. T & C.R. 12
2. Int. T.R. S1 & C.R. 12

Sign supports and lights for "ROAD CLOSED" signs shall be as detailed in the Ohio Manual of Uniform Traffic Control Devices. Payment for providing, erecting, maintaining, and removing lights, signs, and sign supports shall be included in the lump sum price bid for ITEM 614, MAINTAINING TRAFFIC.

APPEARANCE OF BRIDGE
The Contractor shall be responsible for the removal of all foreign material such as waterproofing primer or other asphaltic materials, as soon as practical from the fascia beams and/or wingwalls.

REMOVAL AND DISPOSAL OF EXISTING BRIDGE
The existing bridge shall be removed and, at the Contractor's option, existing concrete and stone removed may be used as embankment protection material, as directed by the Engineer, providing that the material meets the gradation requirements of Section 601.08. Any protruding reinforcing steel shall be burned off at the surface of the concrete. Unusable masonry and other debris shall be disposed of as per Section 202.02.

DESIGN DATA FOR BRIDGE
Design Loading: HL-93 (LRFD)

WATERPROOFING MEMBRANE
Refer to ODOT Proposal Note 445-91 with the following revision.
The paragraph titled "Description" shall read:

This item shall consist of furnishing all necessary labor, materials and equipment to prepare the surface and place a waterproof TYPE 3, 36" wide membrane over the top surface and a TYPE 2, 12" wide membrane over the vertical joints. The joint between the wingwalls and the sides of the three sided structure to be covered by a 36" wide membrane. The membrane shall extend a minimum of 2 feet down each side and overlap the membrane covering the vertical joints.

ALLOWABLE SOIL BEARING PRESSURE
The allowable soil bearing pressure is 2,500 p.s.f.

PROPOSED STRUCTURE

ADDITIONAL EMBANKMENT/BACKFILL MATERIAL
Lump Sum bid for ITEM 603, PRECAST CONCRETE BOX, shall include any necessary embankment or backfill material required between the Proposed Structure and the excavation limits from ITEM 202, Structure Removed.

CAST IN PLACE ALTERNATE
The Contractor may cast in place the wingwalls and footings in accordance with the STANDARD TABLE shown on the TYPICAL SECTION SHEET

ITEM 603 CONDUIT, TYPE A, 706.051
Lump Sum bid shall also include all Footings & Wingwalls (As Per Plan)

REINFORCING STEEL
All reinforcing steel used in footings and wingwalls shall be GRADE 60 and EPOXY COATED If Cast In Place Method Is Used. Epoxy Coating to conform to item 709.00

DEPARTMENT OF HIGHWAYS
HENRY COUNTY, OHIO

GENERAL NOTES

BRIDGE NO. HEN 12-18.25
OVER DITCH 1075
LIBERTY TWP.

Designed:	Drawn:	Checked:	File Name:
HEN. CO. ENG.	S.J.K.	R.L.G.	C/R13/BRIDGES/12-18.25/GEN-NOTES

LEGEND

1. ITEM 448, 1 1/2" ASPHALT CONCRETE SURFACE COURSE
2. ITEM 301, 5" ASPHALT CONCRETE BASE
2B. ITEM 301, ASPHALT CONCRETE BASE NORTH OF BRIDGE (THICKNESS VARIES) SEE PLAN & PROFILE SHEET STA. 12+50 TO 14+00
3. ITEM 304, 6" AGGREGATE BASE
4. ITEM 204, SUBGRADE COMPACTION
5. ITEM 659, SEEDING & MULCHING (TO BE DONE BY COUNTY FORCES)
6. ITEM 407, TACK COAT, APPLIED AT THE RATE OF 0.05 GAL/S.Y.

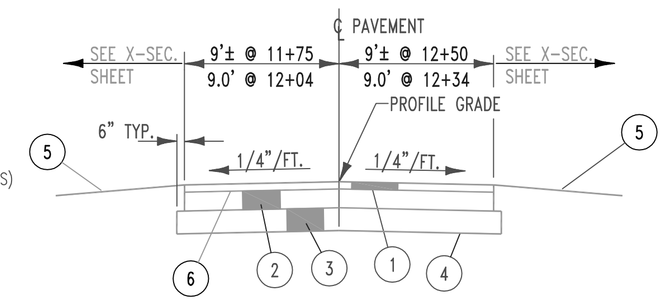

TYPICAL PAVEMENT SECTION

NOT TO SCALE

11+75 TO 12+04.00 & 12+34.00 TO 12+50 (C/L PAVEMENT)
SEE HALF TRANSVERSE SECTION STA. 12+04.00 TO 12+34.00 (C/L PAVEMENT)

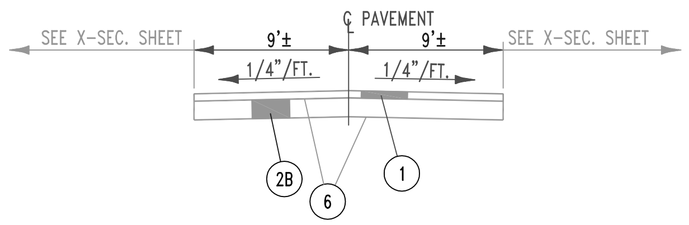

TYPICAL ROADWAY SECTION

(301 VARIABLE THICKNESS, SEE PLAN & PROF. SHEET 12+50 TO 14+00 FOR 301 THICKNESSES)

NOT TO SCALE

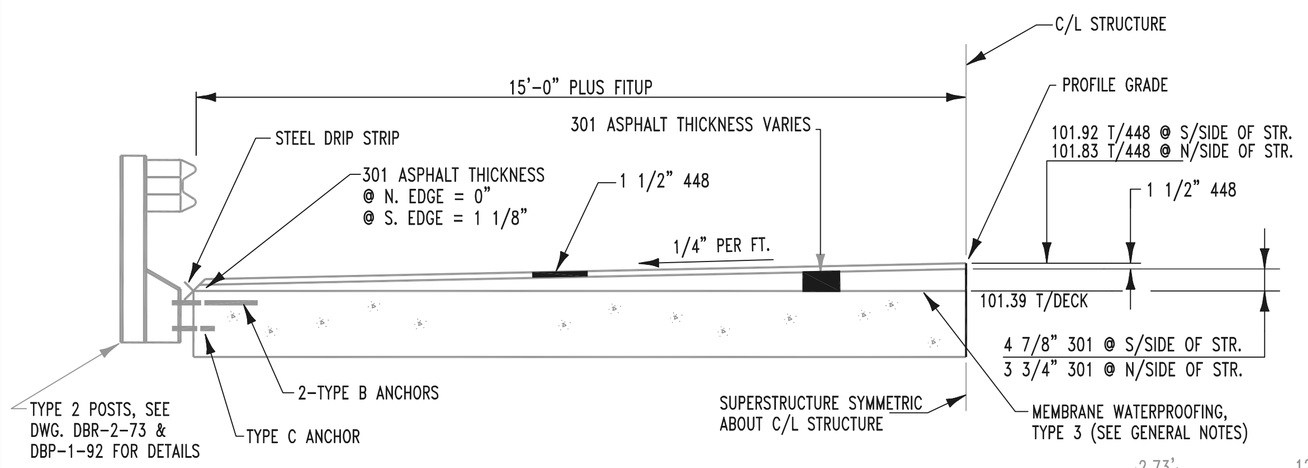

HALF TRANSVERSE SECTION

NOT TO SCALE

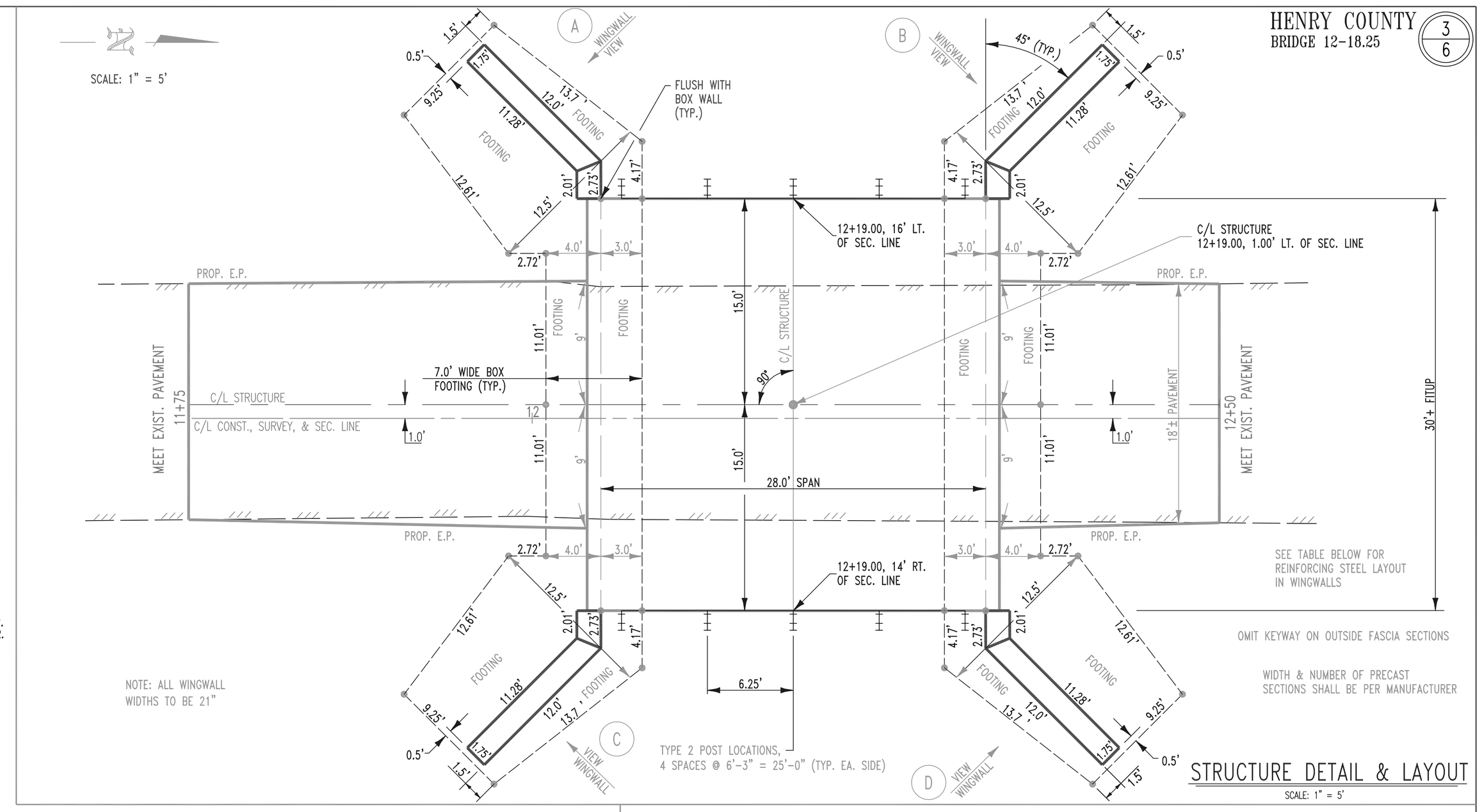

STRUCTURE DETAIL & LAYOUT

SCALE: 1" = 5'

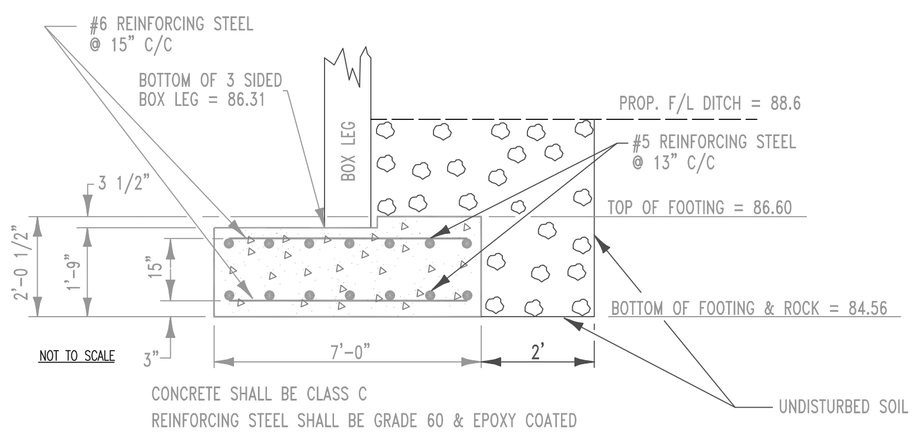

FOOTING ELEVATION & REINFORCING STEEL LAYOUT FOR BOX SECTION (IF CAST IN PLACE METHOD IS USED)

SEE CAST IN PLACE ALTERNATE NOTE ON GENERAL NOTES SHEET

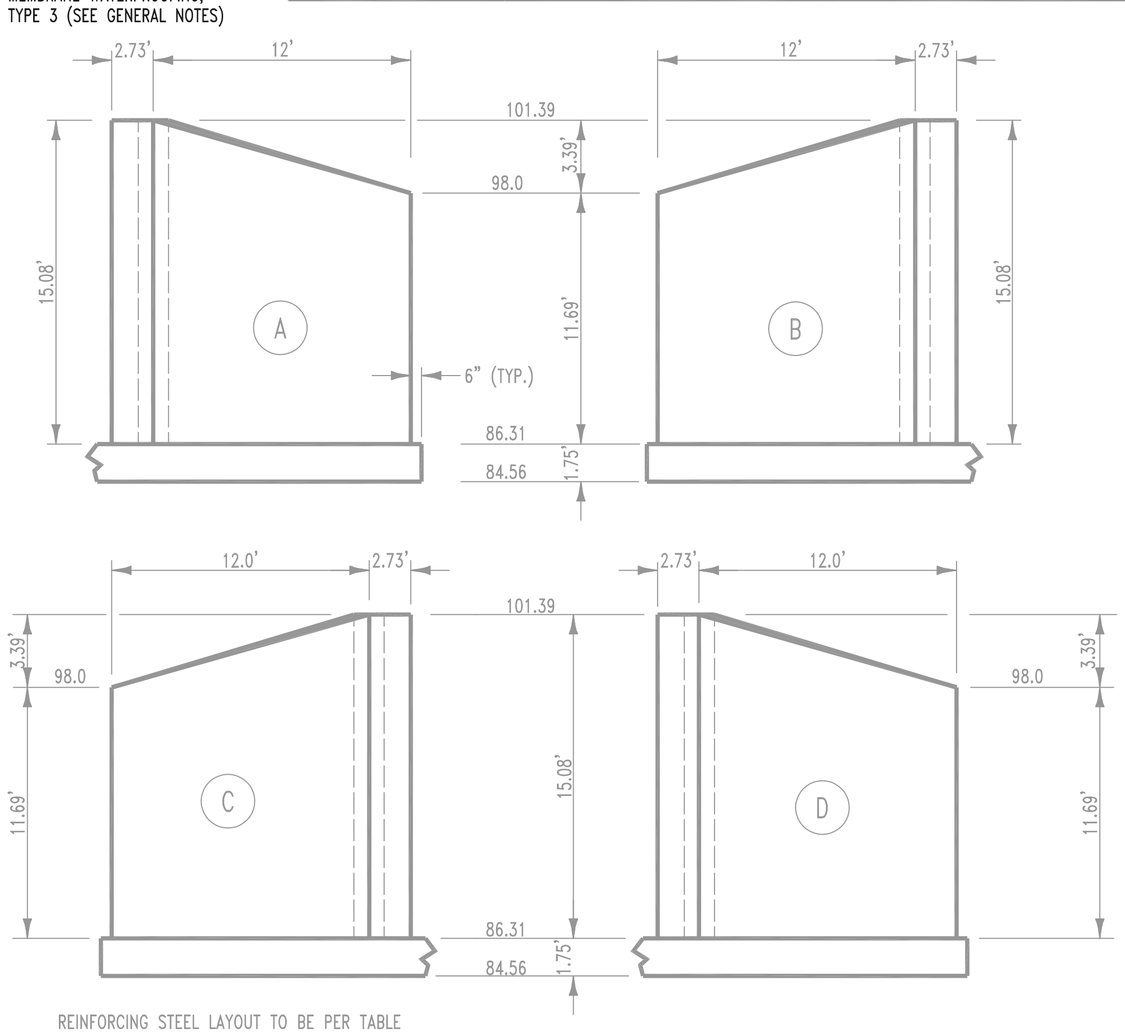

REINFORCING STEEL LAYOUT TO BE PER TABLE
IF CAST IN PLACE METHOD IS USED. REINFORCING STEEL SHALL BE GRADE 60 & EPOXY COATED
ALL CONCRETE TO BE CLASS C
PROVIDE 1" X 45° CHAMFER ON ALL EXPOSED EDGES
SEE CAST IN PLACE ALTERNATE NOTE ON GENERAL NOTES SHEET

WINGWALL DETAILS

NO SCALE

Note: Spacing of S-Bars is approx. Use tabular number of bars and space evenly with 2" cover.

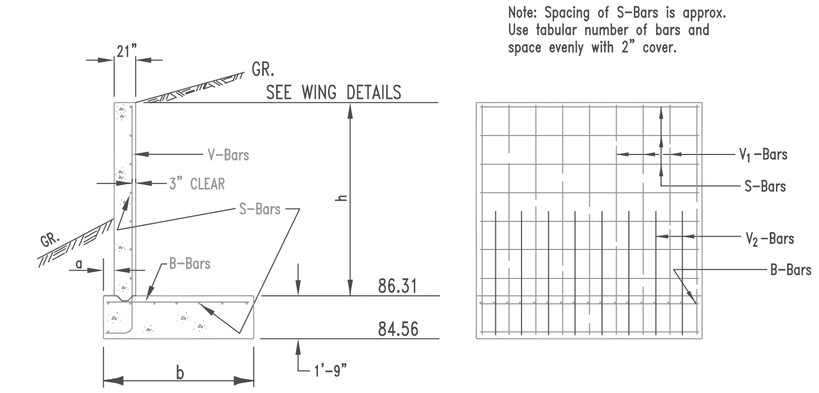

h	a	b	t	V-Bars		Lengths		B-Bars			S-Bars	
(ft.)	(in.)	(ft.-in.)	(in.)	Size	Spacing	V_1 Bars	V_2 Bars	Size	Spacing	Length	Size	Spacing
5	6"	3-6	12	#3	10"	7'-8"		#3	10"	3'-2"	#3	12"
6	6"	4-3	12	#4	10"	8'-9"		#4	10"	3'-10"	#3	12"
7	6"	5-0	12	#4	7"	9'-8"		#4	7"	4'-8"	#3	12"
8	6"	6-0	12	#5	7"	10'-8"	7'-0"	#5	9"	5'-8"	#3	12"
9	6"	7-0	15	#5	7"	12'-0"	7'-8"	#5	7"	6'-8"	#3	12"
10	6"	7-9	15	#6	9"	13'-0"	7'-10"	#6	9"	7'-4"	#3	12"
11	12"	8-6	18	#6	9"	14'-6"	9'-3"	#6	7"	8'-0"	#4	12"
12	18"	9-3	18	#6	9"	16'-0"	10'-6"	#7	9"	8'-9"	#4	12"
13	24"	10-0	18	#7	9"	17'-6"	11'-9"	#7	7"	9'-6"	#4	12"
14	30"	11-0	21	#7	9"	19'-3"	13'-0"	#8	9"	10'-6"	#5	12"
15	36"	12-6	21	#8	9"	20'-9"	16'-0"	#8	7"	12'-0"	#5	12"
16	42"	14-6	24	#8	9"	22'-6"	19'-0"	#8	6"	14'-0"	#5	12"

WINGWALL NOTES:

IF CAST IN PLACE METHOD IS USED. REINFORCING STEEL SHALL BE GRADE 60 & EPOXY COATED
ALL CONCRETE TO BE CLASS C
PROVIDE 1" X 45° CHAMFER ON ALL EXPOSED EDGES
SEE CAST IN PLACE ALTERNATE NOTE ON GENERAL NOTES SHEET

DEPARTMENT OF HIGHWAYS
HENRY COUNTY, OHIO

TYPICAL SECTIONS STRUCTURE DETAILS

BRIDGE NO. HEN 12-18.25
OVER DITCH 1075
LIBERTY TWP.

Designed:	Drawn:	Checked:	FileName
HEN. CO. ENG.	SK	R.L.G.	C:\R13\BRIDGES\12-18.25\TYPICAL

GENERAL SUMMARY

ITEM	ITEM EXT.	GRAND TOTAL	UNIT	DESCRIPTION
				ROADWAY
201		1	LUMP	CLEARING & GRUBBING (INCLUDES ANY TREES & STUMPS MARKED FOR REMOVAL ON PLAN SHEET)
202		47	LIN. FT.	PIPE REMOVED, 24" & UNDER
202		1	LUMP	STRUCTURE REMOVED (12-18.25) OVER 20' SPAN
203		336	CU. YD.	EXCAVATION (INCLUDES FULL DEPTH PAVEMENT REMOVAL AS SHOWN ON PLAN & X-SEC. SHEET)
203		142	CU. YD.	EMBANKMENT
204		100	SQ. YD.	SUBGRADE COMPACTION
517		75	LIN. FT.	RAILING, (DEEP BEAM RAIL W/STEEL TUBULAR BACKUP
				TYPE 2 STEEL POSTS & ANCHOR BOLTS)
606		56.25	LIN. FT.	GUARDRAIL, TYPE 5, (AS PER PLAN)
				EROSION CONTROL
601		154	CU. YD.	ROCK CHANNEL PROTECTION, TYPE D W/O FILTER (AS PER PLAN)
659		——	M. GAL.	WATER (TO BE PERFORMED BY COUNTY FORCES)
659		——	SQ. YD.	SEEDING & MULCHING (TO BE PERFORMED BY COUNTY FORCES)
659		——	TON	COMMERCIAL FERTILIZER (TO BE PERFORMED BY COUNTY FORCES)
				DRAINAGE
503		1	LUMP	UNCLASSIFIED EXCAVATION (INCLUDES ANY CUTS & FILLS REQUIRED TO SATISFY ANY OSHA TRENCH REQUIREMENTS)
512		37	SQ. YD.	TYPE 2, MEMBRANE WATERPROOFING (SEE GENERAL NOTES, SHEET 2)
512		114	SQ. YD.	TYPE 3, MEMBRANE WATERPROOFING (SEE GENERAL NOTES, SHEET 2)
603		20	LIN. FT.	8" CONDUIT, TYPE E, 707.32
603		15	LIN. FT.	24" CONDUIT, TYPE E, 707.33
603		1	LUMP	CONDUIT, TYPE A, 706.051
				PRECAST REINFORCED CONC. 3 SIDED FLAT TOPPED CULVERT ON CONC. FOOTINGS.
				28' SPAN X 13.75' RISE (28.00' CLEAR SPAN)- 0° SKEW, TO INCLUDE ALL FOOTINGS & WINGWALLS (AS PER PLAN)
SPECIAL		75	LIN. FT.	DRIP STRIP
				PAVEMENT
301		57	CU. YD.	ASPHALT CONCRETE BASE
304		16	CU. YD.	AGGREGATE BASE
407		42	GAL.	TACK COAT (APPLIED AT THE RATE OF 0.05 GAL./S.Y.)
448		22	CU. YD.	ASPHALT CONCRETE SURFACE COURSE
				MISCELLANEOUS
614		1	LUMP	MAINTAINING TRAFFIC
623		1	LUMP	CONSTRUCTION LAYOUT STAKES
624		1	LUMP	MOBILIZATION
103.05		1	LUMP	CONTRACT PERFORMANCE & PAYMENT BOND

SUB-SUMMARY

REF. NO.	STATION FROM	STATION TO	SIDE	ROAD	202 PIPE REMOVED 24" & UNDER LIN. FT.	202 STRUCTURE REMOVED 12-18.25 OVER 20' SPAN LUMP	601 ROCK CHANNEL PROTECTION, TYPE D W/O FILTER (AS PER PLAN) CU. YD.	603 8" CONDUIT TYPE E 707.32 LIN. FT.	603 24" CONDUIT TYPE E 707.33 LIN. FT.	603 CONDUIT, TYPE A 706.051, PRECAST REINFORCED CONC. 3 SIDED FLAT TOPPED CULVERT ON CONC. FOOTINGS 28' SPAN X 13.75' RISE - (28' CLEAR SPAN) 0° SKEW, TO INCLUDE ALL FOOTINGS & WINGWALLS LUMP	517 RAILING (DEEP BEAM RAILING W/STEEL TUBULAR BACKUP TYPE 2 STEEL POSTS & ANCHOR BOLTS) LIN. FT.	606 GUARDRAIL TYPE 5 (AS PER PLAN) LIN. FT.	SHEET NUMBER
1R	11+84	11+99	LT.	12	15								5-6
2R	11+96	12+52	L&R	12		1							5-6
3R	12+30	12+50	RT.	12	20								5-6
4R	12+23	12+28	LT.	12	5								5-6
5R	12+28	12+35	LT.	12	7								5-6
1D	11+84	12+03	LT.	12				20					5-6
2D	12+04.00 (C/L CONST.)	12+34.00 (C/L CONST.)	L&R	12						1			3-5-6
3D	12+35	12+50	RT.	12					15				5-6
1RCP	WEST SIDE OF STRUCTURE		LT.	12			92						3-5-6
2RCP	THRU STRUCTURE		LT&RT	12			32						3-5-6
3RCP	EAST SIDE OF STRUCTURE		RT.	12			30						3-5-6
1GR	11+90.76	12+00.25	LT.	12								12.5	5
	12+00.25	12+37.75	LT.	12							37.5		3-5-6
	12+37.75	12+44.00	LT.	12								6.25	5
	12+44.00	12+52.22	LT.	12								12.5	5
2GR	11+90.76	12+00.25	RT.	12								12.5	5
	12+00.25	12+37.75	RT.	12							37.5		3-5-6
	12+37.75	12+47.24	RT.	12								12.5	5
TOTALS					47	1	154	20	15	1	75	56.25	

DEPARTMENT OF HIGHWAYS
HENRY COUNTY, OHIO

GENERAL SUMMARY & SUB-SUMMARY

BRIDGE NO. HEN-12-18.25
OVER DITCH 1075
LIBERTY TWP.

Designed:	Drawn:	Checked:	File Name
R.L.G	S.J.K	R.L.G	C:\R13\BRIDGES\G-1100\GEN-SUMM

BR. 12-18.25

LIBERTY TWP.

5/6

Scale: 1''=20'

(60' R/W)

TYPE D ROCK CHANNEL PROTECTION

(18" THICK EXCEPT THRU STRUCTURE)

1RCP 92 C.Y. WEST SIDE OF STRUCTURE

2RCP 32 C.Y. THRU STRUCTURE

3RCP 30 C.Y. EAST SIDE OF STRUCTURE

154 C.Y. TOTAL ROCK CHANNEL PROTECTION

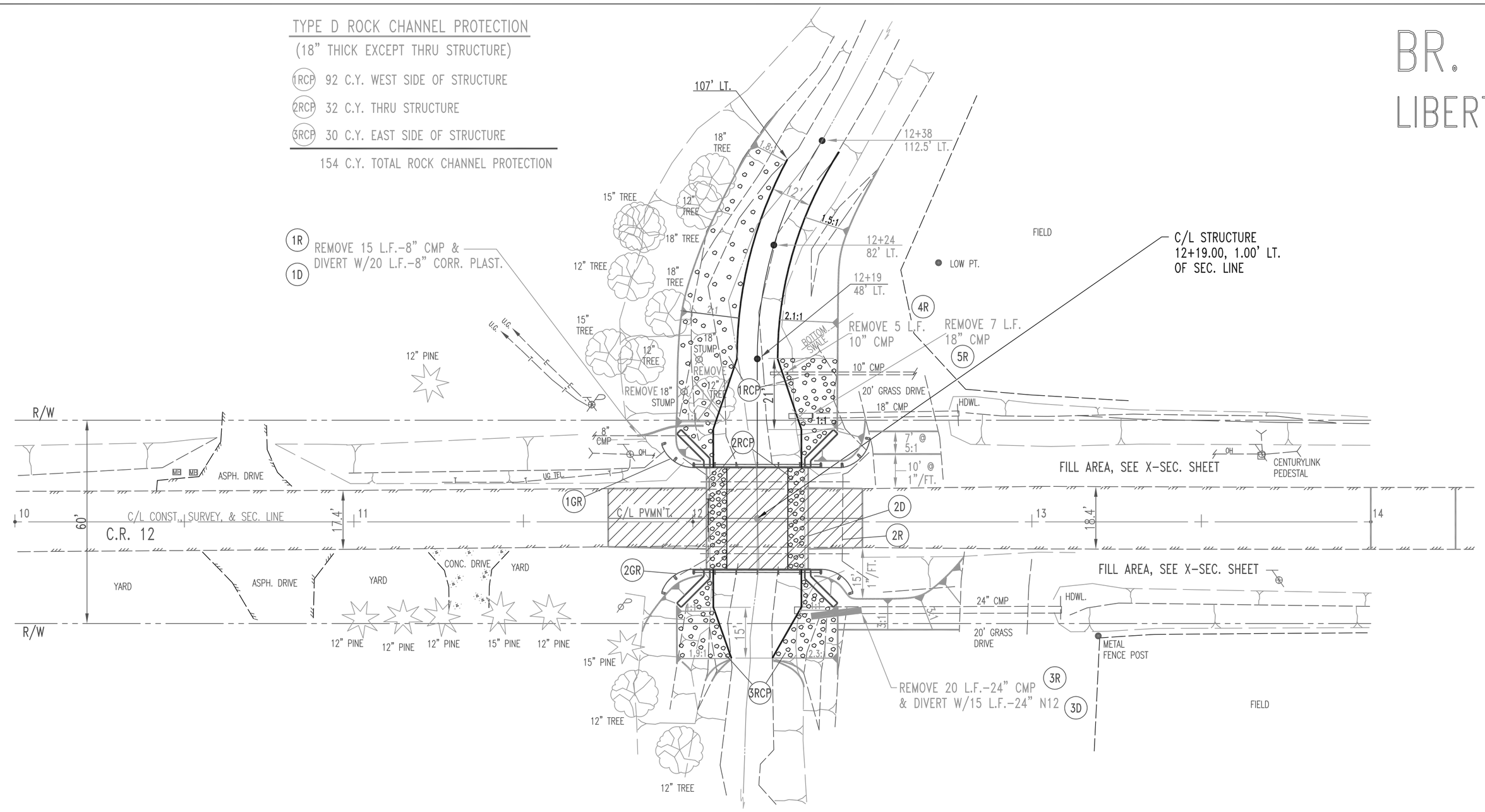

GUARDRAIL LIST

WEST SIDE

37.50 L.F. TYPE 5, DEEP BEAM RAIL W/TUBULAR BACKUP
6.25 L.F. TYPE 5, STRAIGHT RAIL, (1/2 SECTION IN NW QUAD.)
25.00 L.F. TYPE 5, 10' RADIUS RAIL
2 FLARED END SECTIONS

EAST SIDE

37.50 L.F. TYPE 5, DEEP BEAM RAIL W/TUBULAR BACKUP
25.00 L.F. TYPE 5, 10' RADIUS RAIL
2 FLARED END SECTIONS

SBM
MAG. NAIL @ STA. 14+00, ELEV. = 100.00

EXIST. SFN-3530116
PROP. SFN-3534790

EXISTING STRUCTURE

TYPE: CONCRETE BEAM SIMPLE W/BANNISTERS
SPAN: 40'
BR. ROADWAY WIDTH: 20'
APPROACH ROADWAY WIDTH: 18'
ABUTS: CONCRETE GRAVITY
SKEW: 0°
YEAR BUILT: 1930

PROPOSED STRUCTURE

TYPE: PRECAST REINFORCED CONC. 3-SIDED FLAT TOPPED CULVERT ON CONC FOOTINGS
28' SPAN X 13.75' RISE / 28.00' CLEAR SPAN)
ROADWAY WIDTH: 30' F/F GUARDRAIL
DESIGN LOADING: HL-93 (LRFD)
SKEW: 0°
WEARING SURFACE: ASPHALT CONCRETE

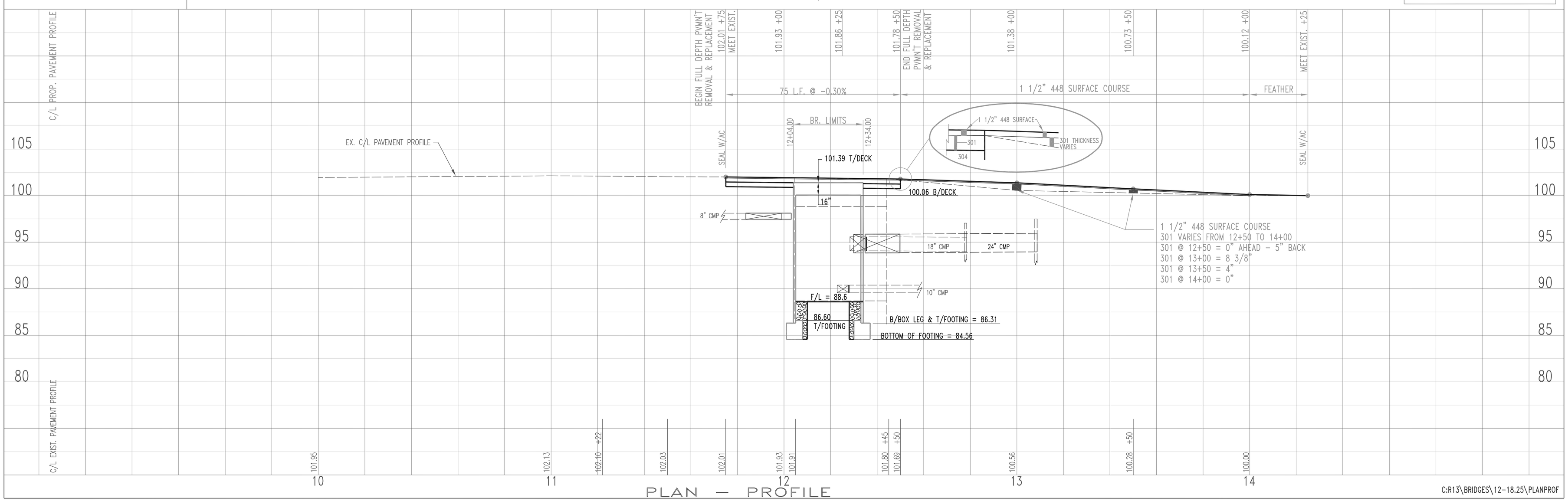

PLAN — PROFILE

C:R13\BRIDGES\12-18.25\PLANPROF

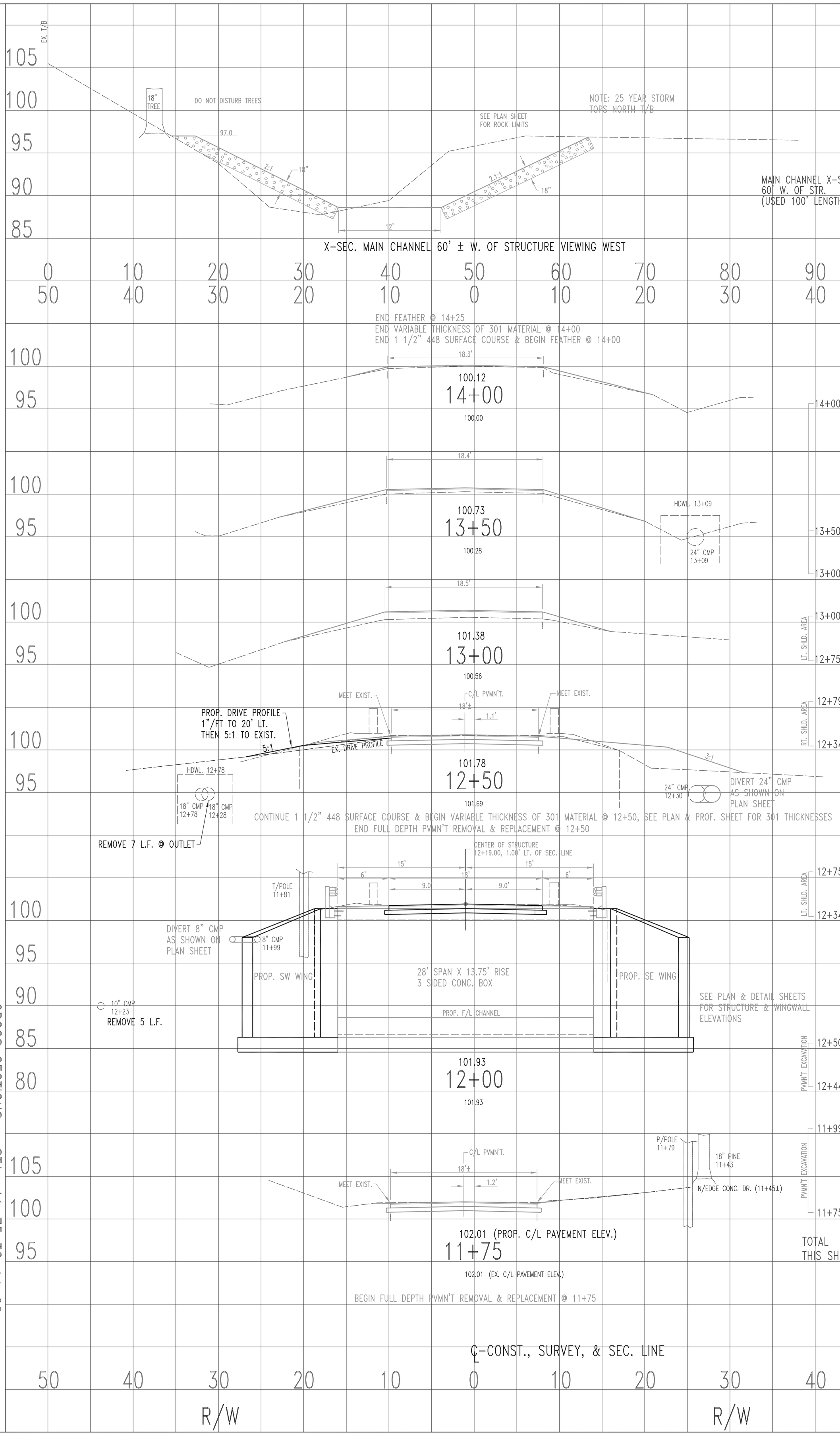

EARTHWORK					
	END AREA		VOLUME		
	CUT	FILL	CUT	FILL	
MAIN CHANNEL X-SEC. 60' W. OF STR. (USED 100' LENGTH)	85	16	315	59	
14+00	0	4			
			0	10	
13+50	0	7			
			0	14	
13+00 AH.	0	8			
13+00 BK.	0	5			
			0	5	
LT. SHLD. AREA 12+75	0	5			
RT. SHLD. AREA 12+79	0	26			
			0	43	
12+34	0	26			
LT. SHLD. AREA 12+75	0	7			
			0	11	
12+34	0	7			
PVMN'T EXCAVATION 12+50	19	0			
			4	0	
12+44	19	0			
11+99	19	0			
PVMN'T EXCAVATION			17	0	
11+75	19	0			
TOTAL THIS SHEET			336	142	

FULL CROSS SECTION

CROSS SECTIONS - STA. 11+75 TO 14+00

C:\R13\BRIDGES\12-18.25\XSEC

BR. 12-18.25
LIBERTY TWP.

6/6