HENRY COUNTY

HARRISON TOWNSHIP
MONROE TOWNSHIP

COUNTY ROAD M IMPROVEMENT

BRIDGE NO. HEN-M-7.75

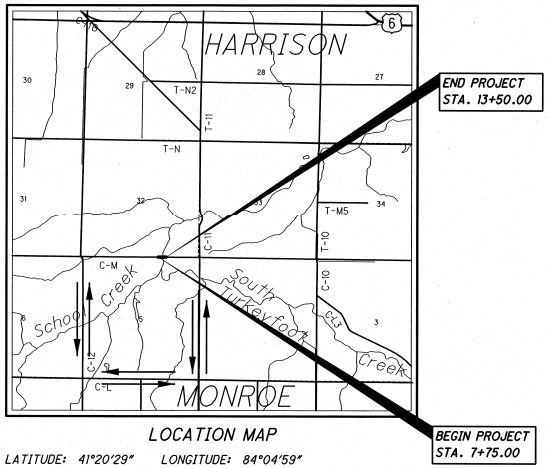

LOCATION MAP

LATITUDE: 41°20'29" LONGITUDE: 84°04'59"

SCALE IN MILES

0 1/2 1 1 1/2 2

N

PORTION TO BE IMPROVED
INTERSTATE HIGHWAY
STATE & FEDERAL ROUTES
COUNTY & TOWNSHIP ROADS
OTHER ROADS
DETOUR ROUTE

DESIGN DESIGNATION

CURRENT ADT (2009)	258
DESIGN YEAR ADT (2029)	362
DESIGN HOURLY VOLUME (2029)	36
DIRECTIONAL DISTRIBUTION	55%
DESIGN SPEED	55 MPH
LEGAL SPEED	55 MPH

DESIGN FUNCTIONAL CLASSIFICATION:
RURAL LOCAL

DESIGN EXCEPTIONS

NONE

UNDERGROUND UTILITIES
CONTACT BOTH SERVICES
CALL TWO WORKING DAYS
BEFORE YOU DIG
CALL
1-800-362-2764
(TOLL FREE)
OHIO UTILITIES PROTECTION SERVICE
NON-MEMBERS
MUST BE CALLED DIRECTLY
OIL & GAS PRODUCERS PROTECTIVE
SERVICE CALL: 1-800-925-0988

PLAN PREPARED BY:

The Mannik & Smith Group, Inc.
Civil Engineering, Surveying and Environmental Consulting

INDEX OF SHEETS:

TITLE SHEET	1
BENCHMARKS & CENTERLINE REFERENCES	2
TYPICAL SECTIONS	3
GENERAL NOTES	4
GENERAL SUMMARY	5
PLAN AND PROFILES	6-7
CROSS SECTIONS	8-10
STRUCTURE (OVER 20 FOOT SPAN)	11-21

PROJECT DESCRIPTION

THIS WORK SHALL CONSIST OF A BRIDGE REPLACEMENT CARRYING CR M OVER SOUTH TURKEYFOOT CREEK AND ROADWAY IMPROVEMENTS NECESSARY TO ACCOMMODATE THE NEW BRIDGE.

PROJECT EARTH DISTURBED AREA: 0.79 ACRES
ESTIMATED CONTRACTOR EARTH DISTRUBED AREA: 0.00 ACRES
NOTICE OF INTENT EARTH DISTURBED AREA: N/A
(NOI NOT REQUIRED)

2008 SPECIFICATIONS

THE STANDARD SPECIFICATIONS OF THE STATE OF OHIO, DEPARTMENT OF TRANSPORTATION, INCLUDING CHANGES AND SUPPLEMENTAL SPECIFICATIONS LISTED IN THE PROPOSAL SHALL GOVERN THIS IMPROVEMENT.

I HEREBY APPROVE THESE PLANS AND DECLARE THAT THE MAKING OF THIS IMPROVEMENT WILL REQUIRE THE CLOSING TO TRAFFIC OF THE HIGHWAY AND THAT DETOURS WILL BE PROVIDED.

ENGINEERS SEAL:

STATE OF OHIO CHRISTOPHER E. BEAULIEU 51775 REGISTERED PROFESSIONAL ENGINEER

SIGNED: Christopher E. Beaulieu
DATE: 1-22-10

ENGINEERS SEAL:

STRUCTURES OVER 20'

STATE OF OHIO JAMES H. MOORE 61119 REGISTERED PROFESSIONAL ENGINEER

SIGNED: James P. Moore
DATE: 1-22-10

STANDARD CONSTRUCTION DRAWINGS

BP-3.1	10-19-07	MT-101.60	4-17-09	AS-1-81	07-19-02		
GR-1.1	7-16-04			CPP-1-08	07-18-08		
GR-2.1	1-16-04						
GR-3.6	10-16-09			PSBD-2-07	10-19-07		
GR-5.3	1-16-04						
				TST-1-99	04-18-08		
DM-4.1	4-21-06						
DM-4.4	4-17-09						

SUPPLEMENTAL SPECIFICATIONS

832 5-5-09

SPECIAL PROVISIONS

APPROVED R.L. Germann
DATE 2-1-10 HENRY COUNTY ENGINEER

APPROVED Richard C. Myers
DATE 2-23-10 HENRY COUNTY COMMISSIONER

APPROVED Thomas H. Von Deylen
DATE 2-23-10 HENRY COUNTY COMMISSIONER

APPROVED Robert E. Hastedt
DATE 2-23-10 HENRY COUNTY COMMISSIONER

FEDERAL PROJECT NO.

PID NO.

CONSTRUCTION PROJECT NO.

RAILROAD INVOLVEMENT
NONE

HENRY CR M

W:\Projects\Projects F-J\HENC0016\CAD\HENC0016.GT001.dgn 1/21/2010 11:47:50 AM

S.B.M. #1
GEAR SPIKE IN SOUTH FACE OF 21" TREE STA. 7+41.14, 35.66' LT. NORTHING: 10036.2600 EASTING: 10741.1410 ELEVATION = 679.19

B.M. 143
"X" CUT IN SOUTHEAST CORNER OF SOUTHWEST WINGWALL STA. 9+78.28, 17.07' RT. NORTHING: 9983.5300 EASTING: 10978.2760 ELEVATION = 674.67

S.B.M. #2
GEAR SPIKE IN NORTH FACE OF DUAL 15" AND 18" TREE STA. 12+30.70, 27.47' RT. NORTHING: 9973.1350 EASTING: 11230.7040 ELEVATION = 681.05

STA. 0+00.00 & 0+80.23, ℄ EX. R/W CR M

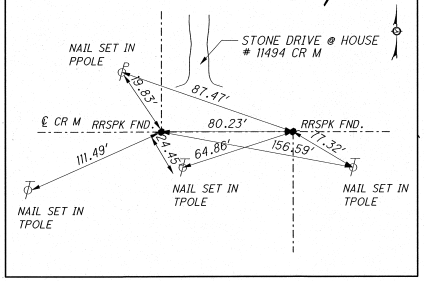

STA. 27+07.86, ℄ EX. R/W CR M

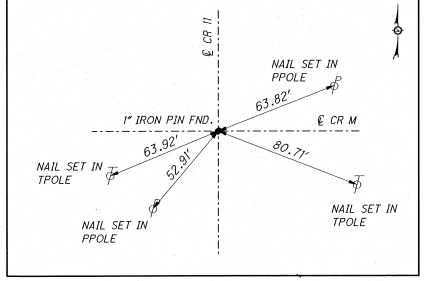

w:\projects\projects f-j\henc0016\cad\HENC0016GW001.dgn 1/21/2010

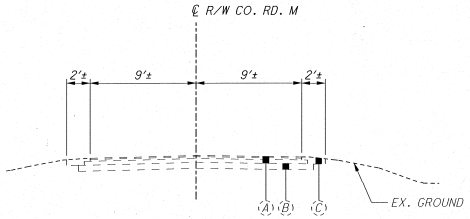

COUNTY ROAD M - EXISTING SECTION

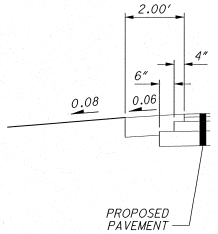

SHOULDER DETAIL

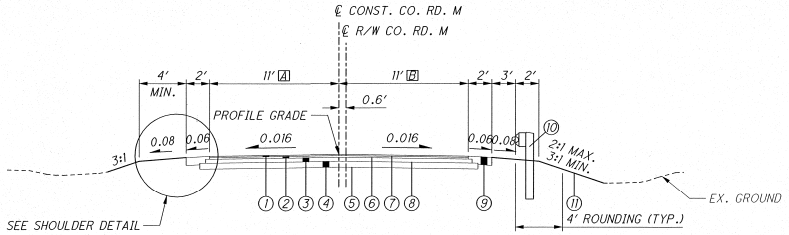

COUNTY ROAD M - PROPOSED SECTION

SECTION APPLIES:
STA. 7+75.00 TO STA. 9+45.73 = 170.73 FT
STA. 11+16.40 TO STA. 13+50.00 = 233.68 FT
TOTAL = 404.33 FT

[A] = VARIES, 9.4' AT STA. 7+75.00 TO 11' AT STA. 8+63.00
11' AT. STA. 9+30.73 TO 14' AT STA. 9+45.73
14' AT. STA. 11+16.40 TO 11' AT STA. 11+31.40
11' AT. STA. 13+32.11 TO 9.2' AT STA. 13+50.00

[B] = VARIES, 8.7' AT STA. 7+75.00 TO 11' AT STA. 7+95.00
11' AT. STA. 9+30.73 TO 14' AT STA. 9+45.73
14' AT. STA. 11+16.40 TO 11' AT STA. 11+31.40
11' AT. STA. 12+43.68 TO 9.1' AT STA. 13+50.00

SEE PLAN SHEET FOR TAPER RATES AND GUARDRAIL LOCATIONS

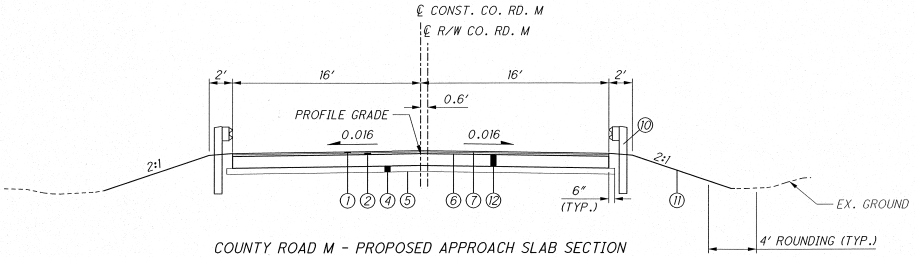

COUNTY ROAD M - PROPOSED APPROACH SLAB SECTION

SECTION APPLIES:
STA. 9+45.73 TO STA. 9+70.73 = 25.00 FT
STA. 10+91.40 TO STA. 11+16.40 = 25.00 FT
TOTAL = 50.00 FT

LEGEND

(1) ITEM 448 - 1½" ASPHALT CONCRETE, SURFACE COURSE, TYPE 1, PG64-22
(2) ITEM 448 - 1½" ASPHALT CONCRETE, INTERMEDIATE COURSE, TYPE 2, PG64-22
(3) ITEM 301 - 5" ASPHALT CONCRETE BASE, PG64-22
(4) ITEM 304 - 6" AGGREGATE BASE
(5) ITEM 204 - SUBGRADE COMPACTION
(6) ITEM 407 - TACK COAT (APPLIED AT A RATE OF 0.075 GAL./SQ. YD.)
(7) ITEM 407 - TACK COAT FOR INTERMEDIATE COURSE (APPLIED AT A RATE OF 0.04 GAL./SQ. YD.)
(8) ITEM 408 - PRIME COAT (APPLIED AT A RATE OF 0.4 GAL./SQ. YD.)
(9) ITEM 304 - 8" AGGREGATE BASE
(10) ITEM 606 - GUARDRAIL, TYPE 5
(11) ITEM 659 - SEEDING AND MULCHING
(12) ITEM 526 - REINFORCED CONCRETE APPROACH SLAB (T=15")

(A) ASPHALT CONCRETE
(B) AGGREGATE BASE
(C) GRAVEL SHOULDER

TYPICAL SECTIONS

HENRY CR M

w:\projects\projects f-j\henc0016\cad\HENC0016GY001.dgn 1/21/2010 11:39:08 AM

UTILITY LINES

THE CONTRACTOR IS TO CONTACT OUPS FOR VERIFCATION AND LOCATION OF ALL UTILITIES WITHIN THE PROJECT AREA PRIOR TO CONSTRUCTION ACTIVITY. THE UTILITY(IES) SHALL BEAR ALL EXPENSE INVOLVED IN RELOCATING (INSTALLING) THE AFFECTED UTILITY LINES. THE CONTRACTOR AND UTILITY(IES) ARE TO COOPERATE BY ARRANGING THEIR WORK IN SUCH A MANNER THAT INCONVENIENCE TO EITHER WILL BE HELD TO A MINIMUM.

LISTED BELOW ARE ALL UTILITIES LOCATED WITHIN THE PROJECT CONSTRUCTION LIMITS TOGETHER WITH THEIR RESPECTIVE OWNERS:

ELECTRIC	TRI-COUNTY RURAL ELECTRIC COOPERATIVE, INC. P.O. BOX 100 MALINTA, OHIO 43535 PHONE: (419) 256-7900
TELEPHONE	CENTURY LINK 375 E. RIVERVIEW NAPOLEON, OHIO 43545 PHONE: (419) 599-4024
CABLE TELEVISION	TIME WARNER 310 JEFFERSON STREET DEFIANCE, OHIO 43512 PHONE: (419) 683-1000

ELEVATION

ALL ELEVATIONS ARE NORTH AMERICAN VERTICAL DATUM OF 1929 (NAVD 1929) BASED ON HENRY COUNTY BENCH MARK #34. HORIZONTAL POSITIONS ARE BASED ON THE OHIO STATE PLANE NORTH ZONE, A LAMBERT CONFORMAL CONIC MAP PROJECTION, THE NORTH AMERICAN DATUM OF 1983 ADJUSTED TO THE NATIONAL SPATIAL REFERENCE SYSTEM OF 2007 (NAD 83 (NSRS 2007)), AND THE GRS80 ELLIPSOID.

WORK LIMITS

THE WORK LIMITS SHOWN ON THESE PLANS ARE FOR PHYSICAL CONSTRUCTION ONLY. PROVIDE THE INSTALLATION AND OPERATION OF ALL WORK ZONE TRAFFIC CONTROL AND WORK ZONE TRAFFIC CONTROL DEVICES REQUIRED BY THESE PLANS WHETHER INSIDE OR OUTSIDE THESE WORK LIMITS.

ITEM 202, CLEARING AND GRUBBING

ALTHOUGH THERE ARE NO TREES OR STUMPS SPECIFICALLY MARKED FOR REMOVAL WITHIN THE LIMITS OF THE PROJECT, A LUMP SUM QUANTITY IS INCLUDED IN THE GENERAL SUMMARY FOR ITEM 201, CLEARING AND GRUBBING. ALL PROVISIONS AS SET FORTH IN THE SPECIFICATIONS UNDER THIS ITEM ARE INCLUDED IN THE LUMP SUM PRICE BID FOR ITEM 201, CLEARING AND GRUBBING.

CONSTRUCTION NOISE

ACTIVITIES AND LAND USE ADJACENT TO THIS PROJECT MAY BE AFFECTED BY CONSTRUCTION NOISE. IN ORDER TO MINIMIZE ANY ADVERSE CONSTRUCTION NOISE IMPACTS, DO NOT OPERATE POWER-OPERATED CONSTRUCTION-TYPE DEVICES BETWEEN THE HOURS OF 9 P.M. AND 6 A.M. IN ADDITION, DO NOT OPERATE AT ANY TIME ANY DEVICE IN SUCH A MANNER THAT THE NOISE CREATED SUBSTANTIALLY EXCEEDS THE NOISE CUSTOMARILY AND NECESSARILY ATTENDANT TO THE REASONABLE AND EFFICIENT PERFORMANCE OF SUCH EQUIPMENT.

PAYMENT FOR ALL OPERATIONS DESCRIBED ABOVE SHALL BE INCLUDED IN THE CONTRACT PRICE FOR THE PERTINENT 603 CONDUIT ITEMS.

ITEM 659, SEEDING AND MULCHING

THE FOLLOWING QUANTITIES ARE PROVIDED TO PROMOTE GROWTH AND CARE OF PERMANENT SEEDED AREAS:

659, SEEDING AND MULCHING	929 SQ. YD.
659, REPAIR SEEDING AND MULCHING	47 SQ. YD
659, COMMERCIAL FERTILIZER	0.13 TON
659, LIME	0.20 ACRES
659, WATER	6 M. GAL.

SEEDING AND MULCHING SHALL BE APPLIED TO ALL AREAS OF EXPOSED SOIL BETWEEN THE RIGHT-OF-WAY LINES, AND WITHIN THE CONSTRUCTION LIMITS FOR AREAS OUTSIDE THE RIGHT-OF-WAY LINES COVERED BY WORK AGREEMENT OR SLOPE EASEMENT. QUANTITY CALCULATIONS FOR SEEDING AND MULCHING ARE BASED ON THESE LIMITS.

MAINTAINING TRAFFIC

TWO-WAY TRAFFIC SHALL BE MAINTAINED AT ALL TIMES, EXCEPT FOR A PERIOD NOT TO EXCEED 90 CONSECUTIVE CALENDAR DAYS, WHEN THROUGH TRAFFIC MAY BE DETOURED AS SHOWN ON SHEET 1. ACCESS TO ADJACENT PROPERTIES AFFECTED BY ANY OF THE CONSTRUCTION OPERATIONS SHALL BE MAINTAINED AT ALL TIMES UNLESS PERMISSION TO CLOSE THE FACILITY IS OBTAINED FROM THE OWNERS AND THE ENGINEER. LIQUIDATED DAMAGES SHALL BE ASSESSED IN ACCORDANCE WITH SECTION 108.07 OF THE CONSTRUCTION AND MATERIAL SPECIFICATIONS FOR EACH CALENDAR DAY THAT THE ROADWAY REMAINS CLOSED TO TRAFFIC BEYOND THE SPECIFIED LIMIT.

THE CONTRACTOR SHALL PROVIDE, ERECT, MAINTAIN, AND SUBSEQUENTLY REMOVE SIGNS, BARRICADES, GATES, AND LIGHTS AS DETAILED IN STANDARD CONSTRUCTION DRAWING MT-101.60.

ALL WORK AND TRAFFIC CONTROL DEVICES SHALL BE IN ACCORDANCE WITH 614 AND OTHER APPLICABLE PORTIONS OF THE SPECIFICATIONS, AS WELL AS THE OHIO MANUAL OF UNIFORM TRAFFIC CONTROL DEVICES. PAYMENT FOR ALL LABOR, EQUIPMENT, AND MATERIALS SHALL BE INCLUDED IN THE LUMP SUM CONTRACT FOR 614, MAINTAINING TRAFFIC, UNLESS SEPARATELY ITEMIZED BELOW.

THE FOLLOWING ESTIMATED QUANTITIES ARE INCLUDED IN THE PLANS FOR MAINTENANCE OF LOCAL TRAFFIC AND DUST CONTROL:

410 TRAFFIC COMPACTED SURFACE TYPE A OR B	50	CU. YD.
616 CALCIUM CHLORIDE	1	TON
616 WATER	1	MGAL.

TRAFFIC CONTROL

THE FOLLOWING ESTIMATED QUANTITIES ARE INCLUDED IN THE PLANS FOR TRAFFIC CONTROL:

642 BARRIER REFLECTOR	4	EACH
642 EDGE LINE	0.22	MILE
642 CENTER LINE	0.11	MILE

ITEM 606 - ANCHOR ASSEMBLY, TYPE E

THIS ITEM SHALL CONSIST OF FURNISHING AND INSTALLING EITHER OF THE FOLLOWING GUARDRAIL END TERMINALS, OR AN APPROVED EQUAL AS LISTED ON ROADWAY ENGINEERING'S WEB PAGE AT WWW.DOT.STATE.OH.US/DRRC/ UNDER ROADSIDE SAFETY DEVICES FOR APPROVED GUARDRAIL END TREATMENTS:

1) THE ET-2000 (1997) MANUFACTURED BY TRINITY INDUSTRY, 1170 N. STATE STREET, GIRARD, OHIO 44420 (TELEPHONE: 330-545-4373).

THE LENGTH OF THE ET-2000 (1997) SYSTEM IS CONSIDERED TO BE 50'-0", INCLUSIVE OF TWO 25'-0" LONG RAIL ELEMENTS. INSTALLATION SHALL BE AT THE LOCATIONS SPECIFIED IN THE PLANS, IN ACCORDANCE WITH THE MANUFACTURER'S SPECIFICATIONS AS DETAILED ON THE FOLLOWING PRE-APPROVED SHOP DRAWINGS:

DWG. NO.	DRAWING NAME	DWG./ REV. DATE	ODOT APPROVAL DATE
SS142	ET2000 PLUS 50'-0" PLAN, ELEVATION AND SECTION 25'-0" RAIL, SLEEVE W/PL POSTS 1-4	4/12/00	7/31/00
SS141	ET2000 PLUS PLAN, ELEVATION AND SECTION 25'-0" RAIL, HBA POSTS 1-4	2/29/00	7/31/00
SS158	ET2000 PLUS 50'-0" WITH 12'-6" PANELS AND HBA POSTS 1-4 PLAN, ELEVATION AND SECTION	5/22/00	7/31/00
SS330	ET2000 PLUS 50'-0" WITH FOUR FOUNDATION TUBES AND FOUR CRT POSTS	3/28/06	3/29/06
SS373	ET2000 PLUS 50'-0" WITH 7 SYT POSTS AND ONE HBA POST	6/20/09	1/20/09

2) THE SKT-350 MANUFACTURED BY ROAD SYSTEMS, INC., 2516 MALLORY LANE, STOW, OHIO, 44224, (TELEPHONE: 330-346-0721).

THE LENGTH OF THE SKT-350 SYSTEM IS CONSIDERED TO BE 50'-0", INCLUSIVE OF FOUR 12'-6" LONG RAIL ELEMENTS. INSTALLATION SHALL BE AT THE LOCATIONS SPECIFIED IN THE PLANS, IN ACCORDANCE WITH THE MANUFACTURER'S SPECIFICATIONS AS DETAILED ON THE FOLLOWING PRE-APPROVED SHOP DRAWINGS:

DWG. NO.	DRAWING NAME	DWG./ REV. DATE	ODOT APPROVAL DATE
SKT-4M	SEQUENTIAL KINKING TERMINAL (SKT-350) ASSEMBLY WITH 4 FOUNDATION TUBES	12/11/97	3/6/98
SKT HINGED CRT	SEQUENTIAL KINKING TERMINAL (SKT-350) FOUR POSTS ARE STEEL HINGED AND FIVE POSTS ARE CRT	4/30/06	5/23/06
SKT-SP	SEQUENTIAL KINKING TERMINAL (SKT-350) A SEVEN POST OPTION USING STANDARD STEEL POST	3/30/09	3/4/09

THE FACE OF THE TYPE E-98 IMPACT HEAD SHALL BE COVERED WITH A SHEET OF TYPE G REFLECTIVE SHEETING, PER CMS 730.19, APPROXIMATELY 18" X 18", OR 12" X 18" IF APPLIED TO A RECTANGULAR ET-2000 "PLUS" EXTRUDER HEAD.

REFER TO THE MANUFACTURER'S INSTRUCTION REGARDING THE INSTALLATION OF, AND THE GRADING AROUND, THE FOUNDATION TUBES AND GROUND STRUT. THE TOP OF ANY FOUNDATION TUBE SHOULD BE LESS THAN 4-INCHES ABOVE THE GROUND. THE PLACEMENT OF THE FOUNDATION TUBES SHOULD BE AN APPROPRIATE DEPTH BELOW THE LEVEL LINE IN ORDER TO MAINTAIN THE FINISHED GUARDRAIL HEIGHT OF 27-3/4-INCHES FROM THE EDGE OF THE SHOULDER.

ON-SITE GRADING IS REQUIRED IF THE TOP OF THE FOUNDATION TUBES OR TOP OF THE GROUND STRUT DOES PROJECT MORE THAN 4-INCHES ABOVE THE GROUND LINE.

PAYMENT FOR THE ABOVE WORK SHALL BE MADE AT THE UNIT PRICE BID FOR ITEM 606, ANCHOR ASSEMBLY, TYPE E, EACH, AND SHALL INCLUDE ALL LABOR, TOOLS, EQUIPMENT AND MATERIALS NECESSARY TO CONSTRUCT A COMPLETE AND FUNCTIONAL ANCHOR ASSEMBLY SYSTEM, INCLUDING ALL RELATED TRANSITIONS, REFLECTIVE SHEETING, HARDWARE, GRADING, EMBANKMENT AND EXCAVATION NOT SEPARATELY SPECIFIED, AS REQUIRED BY THE MANUFACTURER.

FARM DRAINS

ALL FARM DRAINS, WHICH ARE ENCOUNTERED DURING CONSTRUCTION, SHALL BE PROVIDED WITH UNOBSTRUCTED OUTLETS. EXISTING COLLECTORS WHICH ARE LOCATED BELOW THE ROADWAY DITCH ELEVATIONS, AND WHICH CROSS THE ROADWAY, SHALL BE REPLACED WITHIN THE CONSTRUCTION LIMITS BY ITEM 603 CONDUIT, TYPE B, ONE COMMERCIAL SIZE LARGER THAN THE EXISTING CONDUIT.

EXISTING COLLECTORS AND ISOLATED FARM DRAINS, WHICH ARE ENCOUNTERED ABOVE THE ELEVATION OF ROADWAY DITCHES, SHALL BE OUTLETTED INTO THE ROADWAY DITCH BY 603 TYPE F CONDUIT. THE OPTIMUM OUTLET ELEVATION SHALL BE ONE FOOT ABOVE THE FLOWLINE ELEVATION OF THE DITCH. LATERAL FIELD TILES WHICH CROSS THE ROADWAY SHALL BE INTERCEPTED BY 603, TYPE E CONDUIT, AND CARRIED IN A LONGITUDINAL DIRECTION TO AN ADEQUATE OUTLET OR ROADWAY CROSSING.

THE LOCATION, TYPE, SIZE AND GRADE OF REPLACEMENTS SHALL BE DETERMINED BY THE ENGINEER AND PAYMENT SHALL BE MADE ON FINAL MEASUREMENTS.

EROSION CONTROL PADS AND ANIMAL GUARDS SHALL BE PROVIDED AT THE OUTLET END OF ALL FARM DRAINS AS PER STANDARD CONSTRUCTION DRAWING DM-1.1, EXCEPT WHEN THEY OUTLET INTO A DRAINAGE STRUCTURE. PAYMENT FOR THE EROSION CONTROL PADS AND ANIMAL GUARDS AND ANY NECESSARY BENDS OR BRANCHES SHALL BE INCLUDED FOR PAYMENT IN THE PERTINENT CONDUIT ITEMS.

THE FOLLOWING ESTIMATED QUANTITIES HAVE BEEN INCLUDED IN THE GENERAL SUMMARY FOR THE WORK NOTED ABOVE:

603 12" CONDUIT, TYPE B 50 FT.
603 8" CONDUIT, TYPE E 50 FT.
603 12" CONDUIT, TYPE F 50 FT.

CALCULATED BCR
CHECKED CEB

GENERAL NOTES

HENRY CR M

w:\projects\projects f:\henc0016\cad\HENC0016GN001.dgn 1/21/2010 11:39:13 AM

SHEET NUMBER					ITEM	ITEM EXT.	GRAND TOTAL	UNIT	DESCRIPTION	SEE SHEET NO.
4	5	6	9	APPROX. QUAN.						
									ROADWAY	
LUMP					201	11000	LUMP		CLEARING AND GRUBBING	
				1162	202	23000	1162	SQ YD	PAVEMENT REMOVED	
		300			202	38000	300	FT	GUARDRAIL REMOVED	
		4			202	47000	4	EACH	BRIDGE TERMINAL ASSEMBLY REMOVED	
			164		203	10000	164	CU YD	EXCAVATION	
			238		203	20000	238	CU YD	EMBANKMENT	
				1233	204	10000	1233	SQ YD	SUBGRADE COMPACTION	
	187.5	212.5			606	13000	400	FT	GUARDRAIL, TYPE 5	
	2	2			606	22010	4	EACH	ANCHOR ASSEMBLY, TYPE E-98	
		4			606	32160	4	EACH	BRIDGE TERMINAL ASSEMBLY, TYPE TST	
									EROSION CONTROL	
929					659	10000	929	SQ YD	SEEDING AND MULCHING	
47					659	14000	47	SQ YD	REPAIR SEEDING AND MULCHING	
0.13					659	20000	0.13	TON	COMMERCIAL FERTILIZER	
0.20					659	31000	0.20	ACRE	LIME	
6					659	35000	6	M GAL	WATER	
1049					832	30000	1049	EACH	EROSION CONTROL	
									DRAINAGE	
50					603	02500	50	FT	8" CONDUIT, TYPE E	
50					603	04400	50	FT	12" CONDUIT, TYPE B	
50					603	05200	50	FT	12" CONDUIT, TYPE F	
									PAVEMENT	
				140	301	46000	140	CU YD	ASPHALT CONCRETE BASE, PG64-22	
				247	304	20000	247	CU YD	AGGREGATE BASE	
				87	407	10000	87	GALLON	TACK COAT	
				47	407	14000	47	GALLON	TACK COAT FOR INTERMEDIATE COURSE	
				390	408	10000	390	GALLON	PRIME COAT	
				49	448	46050	49	CU YD	ASPHALT CONCRETE INTERMEDIATE COURSE, TYPE 2, PG64-22	
				49	448	47020	49	CU YD	ASPHALT CONCRETE SURFACE COURSE, TYPE 1, PG64-22	
									TRAFFIC CONTROL	
LUMP					614	12420	LUMP		DETOUR SIGNING	
4					626	00100	4		BARRIER REFLECTOR	
0.11					642	00090	0.11		EDGE LINE	
0.22					642	00290	0.22		CENTER LINE	
LUMP					614	11000	LUMP		MAINTAINING TRAFFIC	
LUMP					623	10000	LUMP		CONSTRUCTION LAYOUT STAKING	
LUMP					624	10000	LUMP		MOBILIZATION	
									FOR STRUCTURE QUANTITIES, SEE SHEET 12	12

CALCULATED AL Z
CHECKED CEB

GENERAL SUMMARY

HENRY CR M

w:\projects\projects f~\henc0016\cad\HENC0016_GS001.dgn 1/21/2010 11:39:22 AM

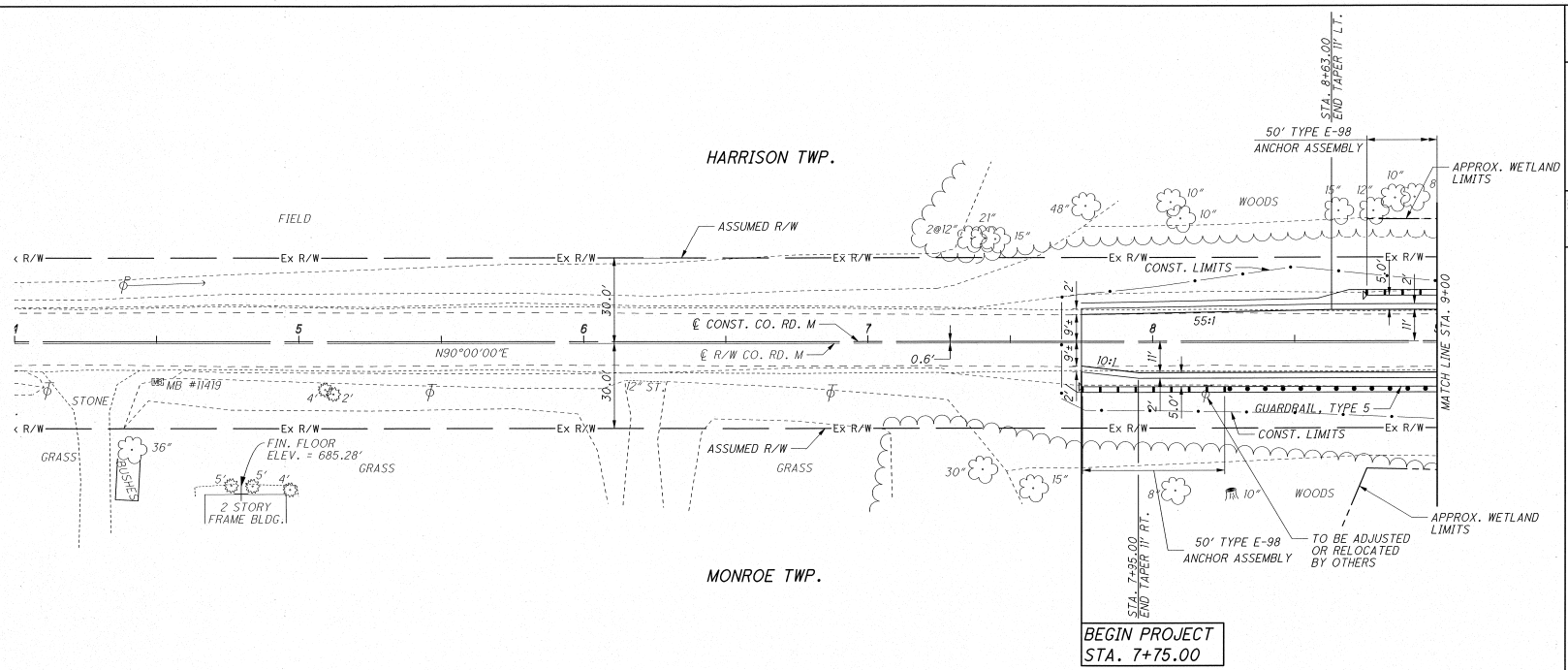

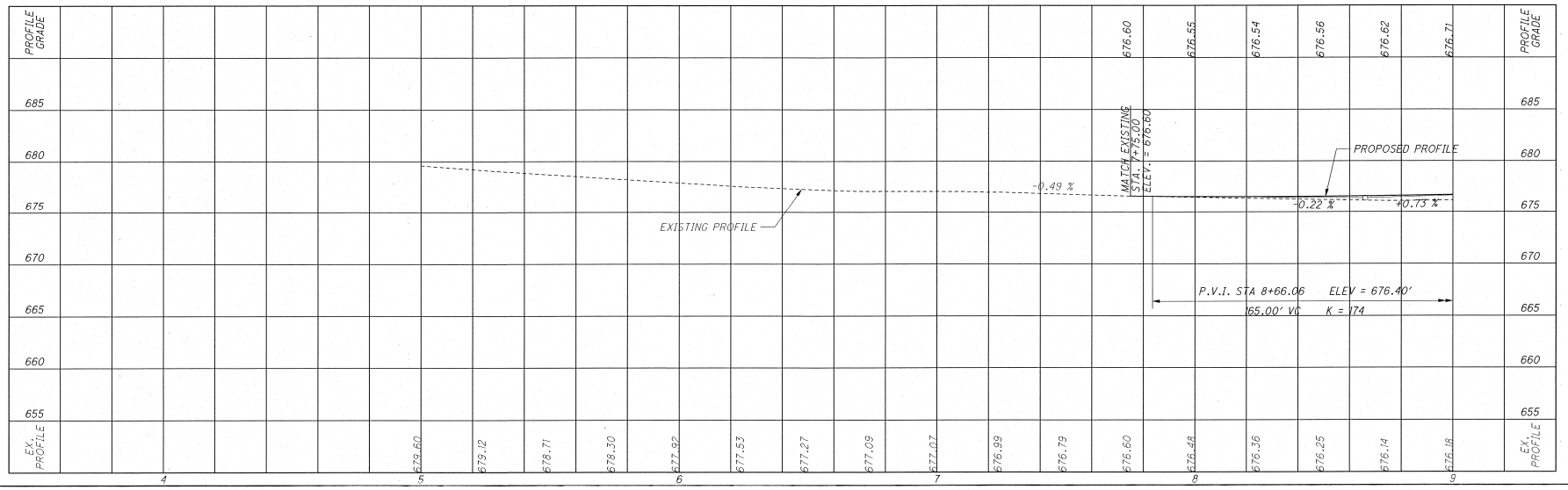

HORIZONTAL SCALE IN FEET

CALCULATED BCR
DRAWN CEB

PLAN AND PROFILE
STA. 4+00.00 TO STA. 9+00.00

HENRY CR M

6
21

w:\projects\projects f:\henc0016\cad\HENC0016GF001.dgn 1/21/2010 11:39:32 AM

W:\Projects\Projects F-J\HENC0016\CAD\HENC0016.GPC02.dgn 2/26/2010 3:53:21 PM

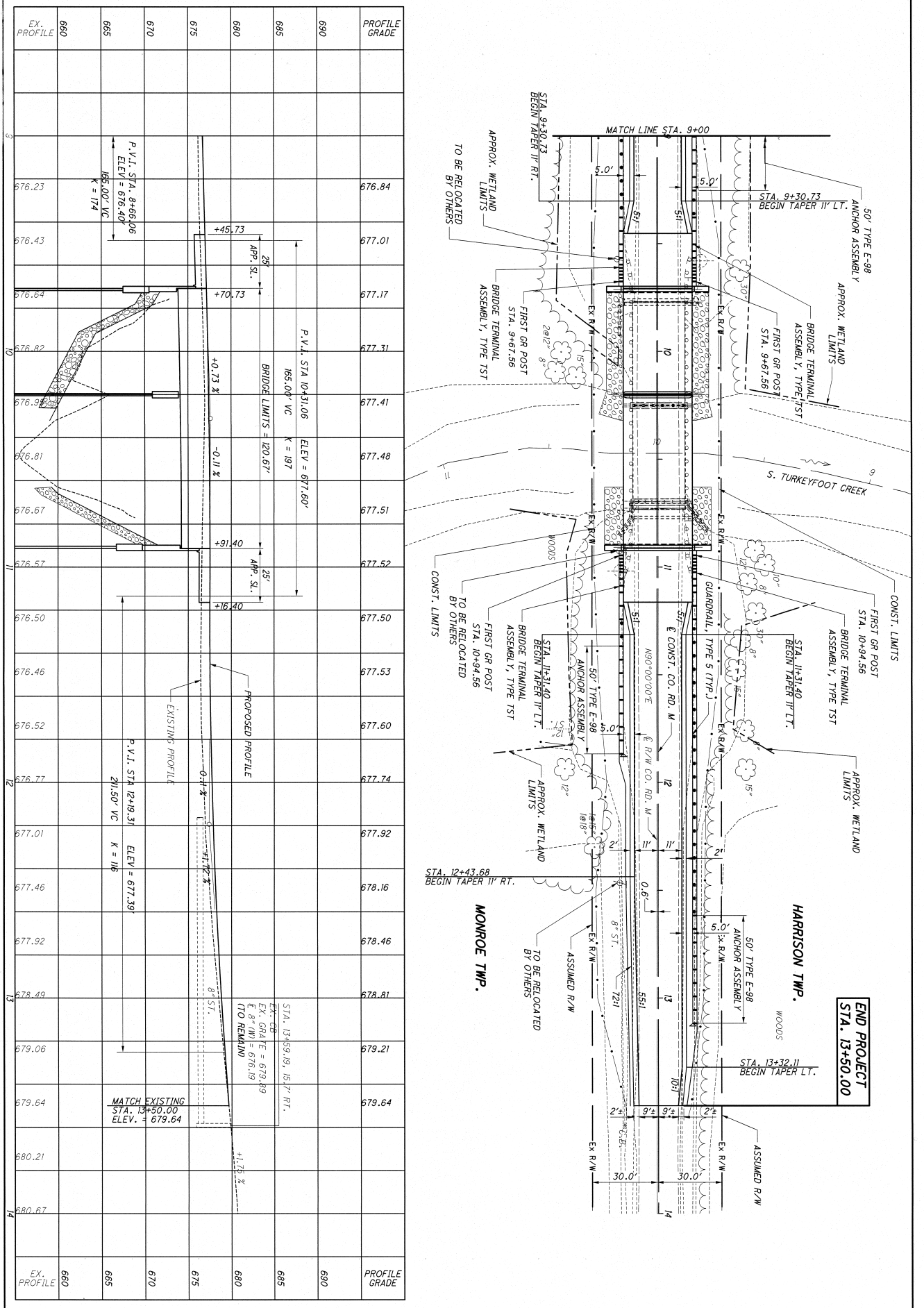

7/21	HENRY CR M
PLAN AND PROFILE STA. 9+00.00 TO STA. 14+00.00	
CALCULATED BCR / CHECKED CEB	HORIZONTAL SCALE IN FEET (0, 20, 40)

w:\projects\projects f-j\henc0016\cad\HENC0016.XS001.dgn 1/21/2010 11:39:57 AM

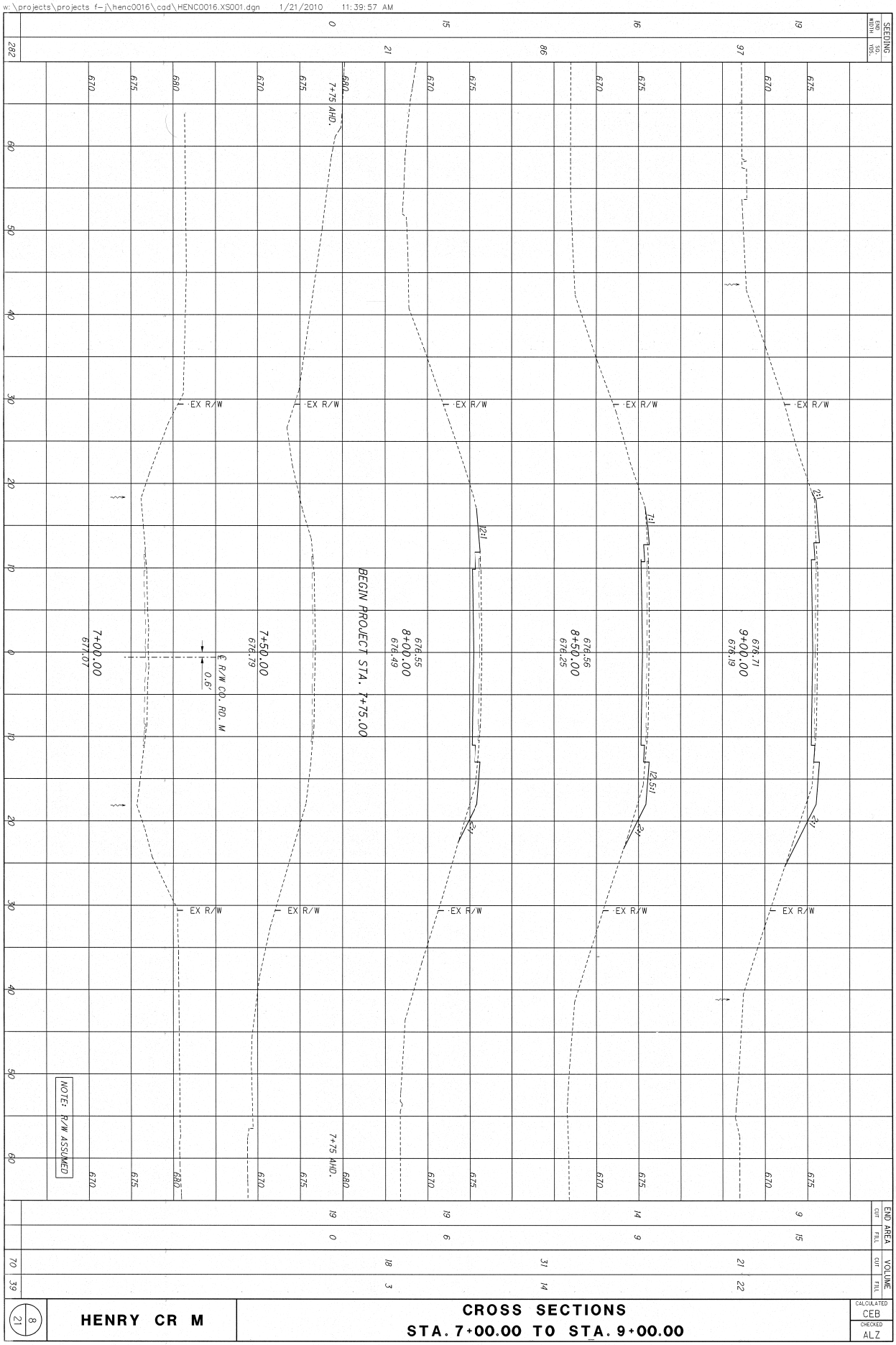

8/21

HENRY CR M

CROSS SECTIONS
STA. 7+00.00 TO STA. 9+00.00

CALCULATED CEB
CHECKED ALZ

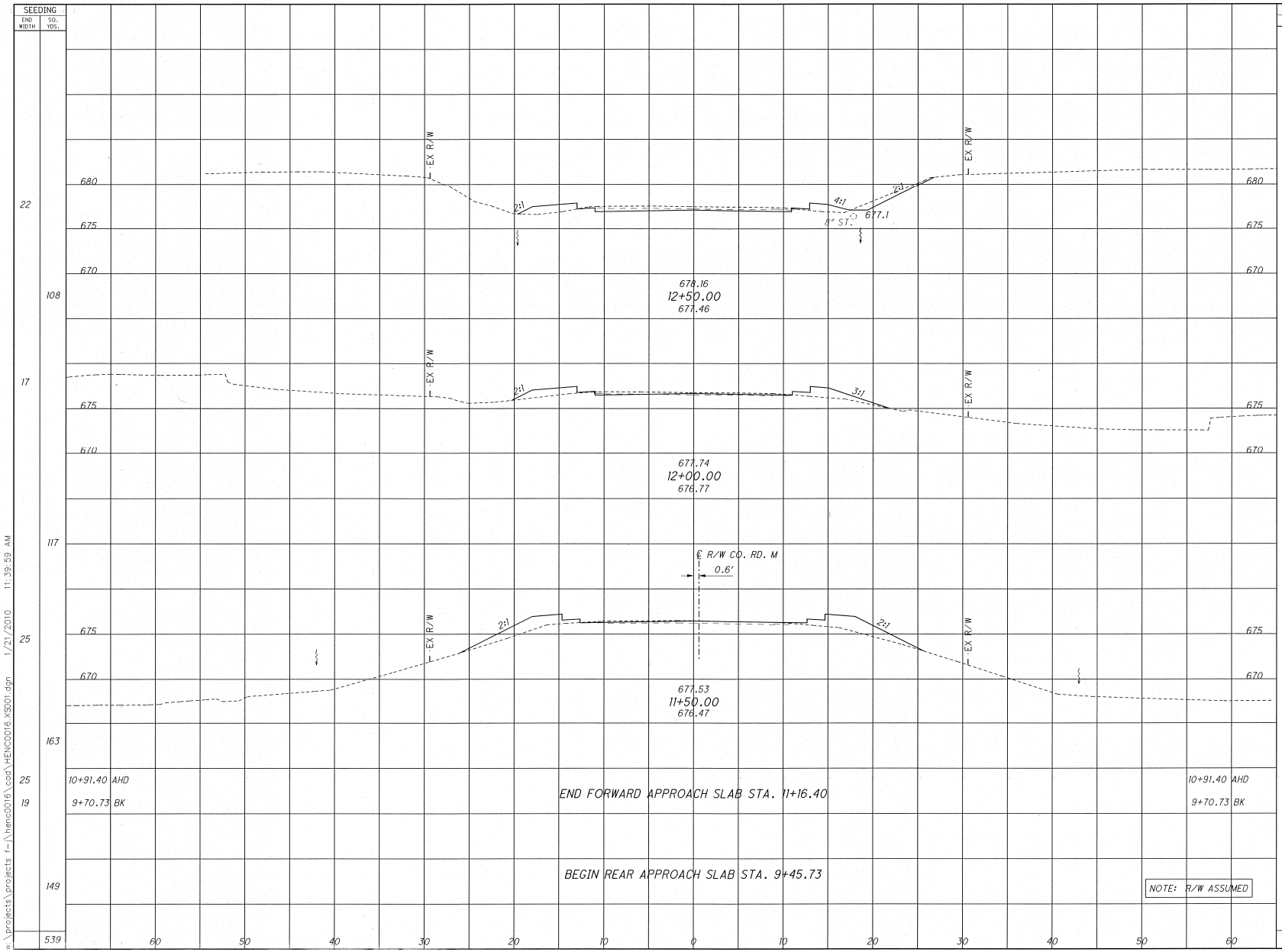

END AREA CUT	END AREA FILL	VOLUME CUT	VOLUME FILL
9	8		
		9	18
1	11		
		1	32
0	24		
		0	52
0	24		
9	10		
		24	26
		34	191

CALCULATED CEB
CHECKED ALZ

CROSS SECTIONS
STA. 11+50.00 TO STA. 12+50.00

HENRY CR M

9
21

w:\projects\projects f-j\henc0016\cad\HENC0016.XS001.dgn 1/21/2010 11:39:59 AM

w:\projects\projects f-j\henc0016\cad\HENC0016.XS001.dgn 1/21/2010 11:39:55 AM

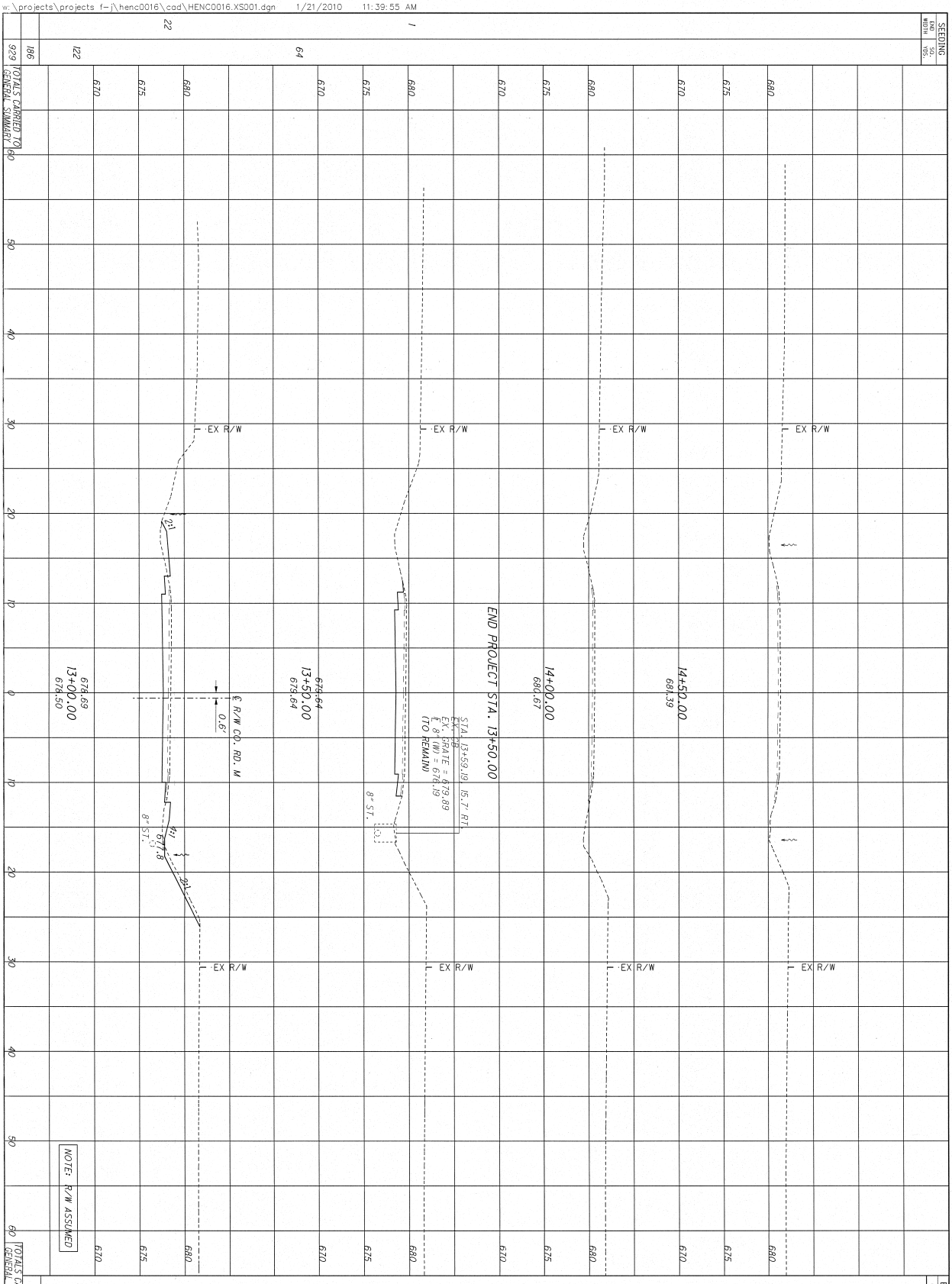

10/21	HENRY CR M	CROSS SECTIONS STA. 13+00.00 TO STA. 14+50.00	CALCULATED CEB CHECKED ALZ

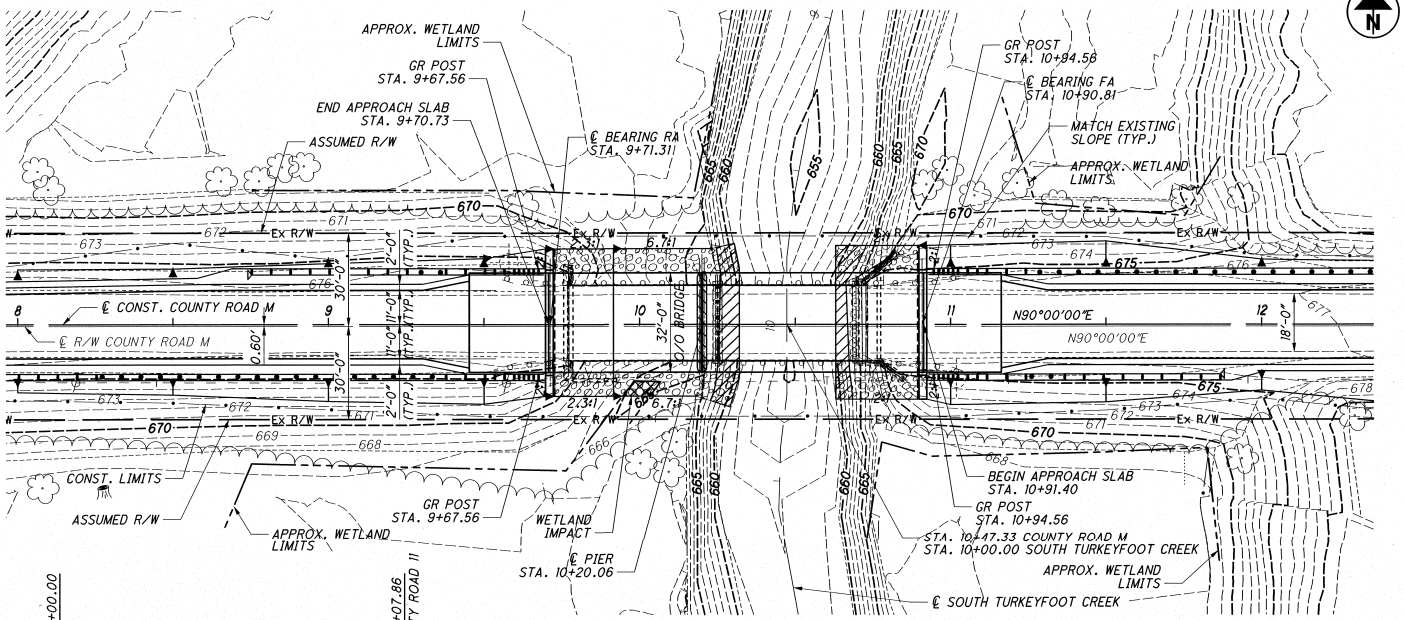

PLAN

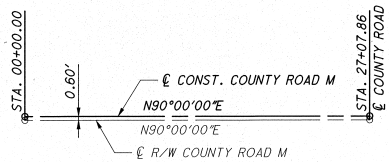

REFERENCE LINE DIAGRAM

ENVIRONMENTAL IMPACTS

ROCK CHANNEL PROTECTEION WORK BELOW OHWM = 0.013 ACRES AND 41.3 CU YD

PIER PILE ENCASEMENT BETWEEN OHWM AND GROUND LINE = 0.0004 ACRES AND 1.06 CU YD

PERMANENT WETLAND IMPACTS = 0.001 ACRES AND 3.15 CU YD

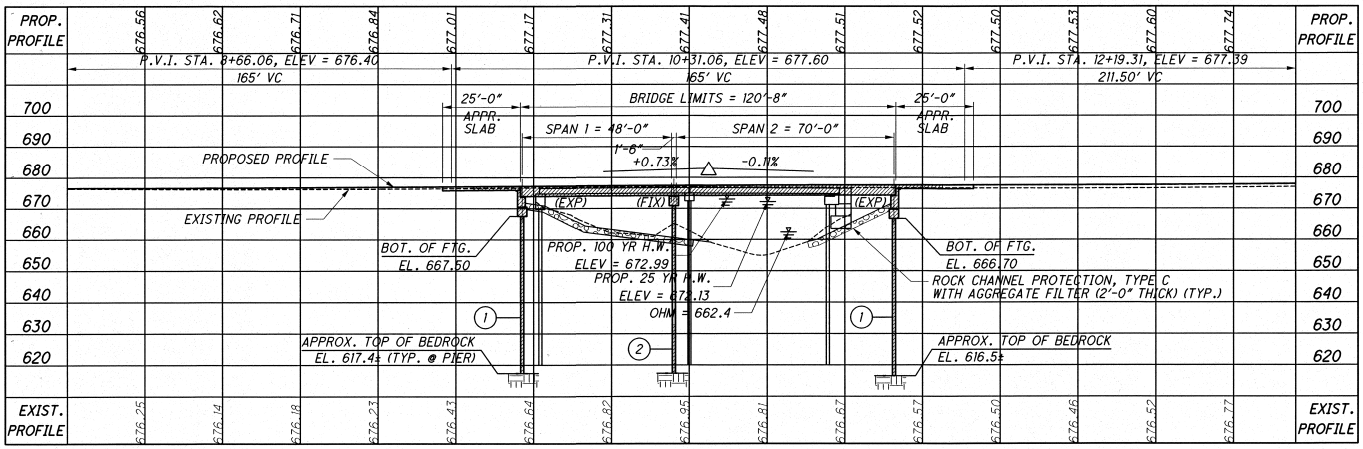

PROFILE ALONG CENTERLINE COUNTY ROAD M

BENCHMARK DATA

BM #1 STA. 07+41.14,	ELEV. 679.19,	OFFSET 36.26',	LT.
BM #2 STA. 12+30.70,	ELEV. 681.05,	OFFSET 26.87',	RT.
BM #3 STA. ,	ELEV. ,	OFFSET ,	
BM #4 STA. ,	ELEV. ,	OFFSET ,	

FOR ADDITIONAL BENCHMARK INFORMATION. SEE ROADWAY PLAN SHEET (2/21)

NOTES

EARTHWORK LIMITS SHOWN ARE APPROXIMATE. ACTUAL SLOPES SHALL CONFORM TO PLAN CROSS SECTIONS.

DESIGN TRAFFIC:
2009 ADT = 258 2009 ADTT = 13
2029 ADT = 362 2029 ADTT = 18
DIRECTIONAL DISTRIBUTION = 55%

LEGEND

BORING LOCATION

(1) HP10X42 STEEL PILES, ESTIMATED LENGTH 55'

(2) HP12X53 STEEL PILES, ESTIMATED LENGTH 55'

HYDRAULIC DATA

DRAINAGE AREA = 108 SQ. MILES
Q (25) = 4990 CFS V (25) = 5.93 FT/S
Q (100) = 6220 CFS V (100) = 6.83 FT/S
STRUCTURE CLEARS THE 100 YEAR
DESIGN HW BY 1.0 ± FEET.

EXISTING STRUCTURE

TYPE: TWO SPAN PRESTRESSED CONCRETE BOX BEAM ON CAPPED PILE PIER, CAPPED PILE ABUTMENT (REAR), AND STONE ABUTMENT WITH EXTENDED CAPPED PILE BEARING SEAT (FWD)

SPANS: 48'-0", 48'-0" C/C SUBSTRUCTURES
ROADWAY: 25'-3" F/F GUARDRAIL
LOADING: H-15
SKEW: NONE
APPROACH SLABS: NONE
ALIGNMENT: TANGENT
CROWN: 0.016 FT/FT
STRUCTURAL FILE NUMBER: 3531147
DATE BUILT: 1968 (FORWARD ABUTMENT UNKNOWN)
DISPOSITION: POOR CONDITION

PROPOSED STRUCTURE

TYPE: TWO SPAN PRESTRESSED CONCRETE BOX BEAM (B33-48) SUPPORTED BY REINFORCED CONCRETE ABUTMENTS AND CAP AND PILE PIER WITH SLOPED EMBANKMENTS

SPANS: 48'-0", 70'-0" C/C BEARINGS
ROADWAY: 32'-0" FACE/FACE RAILING
LOADING: HL93 AND ALTERNATE MILITARY
SKEW: NONE
APPROACH SLABS: 25'-0" LONG (AS-1-81)
ALIGNMENT: TANGENT
CROWN: 0.016 FT/FT
COORDINATES: LATITUDE N 41°-20'-30"
LONGITUDE W 84°-04'-58"

DESIGN AGENCY
The Mannik & Smith Group, Inc.
1800 INDIAN WOOD CIRCLE
MAUMEE, OHIO 43537
TEL: (419) 891-2222
FAX: (419) 891-2325

DATE 12-09
REVIEWED RCH
STRUCTURE FILE NUMBER 3536602
DRAWN JRC
REVISED
DESIGNED JRC
CHECKED JPM

HENRY COUNTY
STA. 9+70.73
STA. 10+91.40

SITE PLAN
M-7.75
COUNTY ROAD M OVER SOUTH TURKEYFOOT CREEK

HENRY C.R. M

1 / 11

11 / 21

W:\Projects\Projects F-J\HENC0016\CAD\HENC0016_SP001.dgn 2/1/2010 11:44:43 AM

STANDARD DRAWINGS AND SUPPLEMENTAL SPECIFICATIONS

REFER TO THE FOLLOWING STANDARD BRIDGE DRAWING(S):

AS-1-81 REVISED 07-19-02

CPP-1-08 REVISED 07-18-08

PSBD-2-07 DATED 10-19-07

TST-1-99 DATED 04-18-08

AND TO THE FOLLOWING STANDARD PLAN INSERT SHEET:

POLYMER MODIFIED ASPHALT EXPANSION JOINT SYSTEM

DESIGN SPECIFICATIONS

DESIGN SPECIFICATIONS: THIS STRUCTURE CONFORMS TO THE "LRFD BRIDGE DESIGN SPECIFICATIONS" ADOPTED BY THE AMERICAN ASSOCIATION OF STATE HIGHWAY AND TRANSPORTATION OFFICIALS, 2007, AND THE ODOT BRIDGE DESIGN MANUAL, 2007.

DESIGN LOADING

OPERATIONAL IMPORTANCE: A LOAD MODIFIER OF 1.0 HAS BEEN ASSUMED FOR THE DESIGN OF THIS STRUCTURE IN ACCORDANCE WITH THE AASHTO LRFD BRIDGE DESIGN SPECIFIATIONS, ARTICLE 1.3.5 AND THE ODOT BRIDGE DESIGN MANUAL, 2007.

DESIGN LOADING: HL-93

FUTURE WEARING SURFACE (FWS) OF 0.060 KIPS PER SQUARE FOOT

DESIGN DATA

CONCRETE CLASS C - COMPRESSIVE STRENGTH 4 KSI (SUBSTRUCTURE AND PIER PILE ENCASEMENTS)

CONCRETE CLASS S - COMPRESSIVE STRENGTH 4.5 KSI (PIER "T" SECTION)

REINFORCING STEEL - MINIMUM YIELD STRENGTH 60 KSI

CONCRETE FOR PRESTRESSED BEAMS:
COMPRESSIVE STRENGTH (FINAL) = 7 KSI
COMPRESSIVE STRENGTH (RELEASE) = 5 KSI

PRESTRESSING STRAND:
½" (AREA = 0.167 SQUARE INCHES), GRADE 270
SEVEN WIRE, UNCOATED LOW RELAXATION PRESTRESSING STRAND
ULTIMATE STRENGTH - 270 KSI
INITIAL STRESS = 202.5 KSI (LOW RELAXATION STRANDS)

LIVE LOAD DISTRIBUTION FACTORS

INTERIOR & EXTERIOR MEMBERS -

LIVE LOAD MOMENT = 0.346 FOR TRUCK & LANE LOADS (2 LANES LOADED)

LIVE LOAD SHEAR = 0.476 FOR TRUCK & LANE LOADS (2 LANES LOADED)

PEDESTRIAN AND DEAD LOADS DISTRIBUTED EQUALLY TO ALL BEAMS

DECK PROTECTION METHOD

WATERPROOFING (TYPE 3) AND ASPHALT CONCRETE OVERLAY

STEEL DRIP STRIP

UTILITY LINES

THE UTILITY(IES) SHALL BORE ALL EXPENSE INVOLVED IN RELOCATING (INSTALLING) THE AFFECTED UTILITY LINES. THE CONTRACTOR AND UTILITY(IES) ARE TO COOPERATE BY ARRANGING THEIR WORK IN SUCH A MANNER THAT INCONVENIENCE TO EITHER WILL BE HELD TO A MINIMUM

SURVEY DISC ON STRUCTURE

THE CONTRACTOR SHALL NOTIFY THE ENGINEER AT LEAST ONE (1) WEEK IN ADVANCE OF POURING THE CONCRETE FOR COMPLETION OF THE ABUTMENT. THE ENGINEER WILL PROVIDE THE CONTRACTOR ONE (1) SURVEY DISC FOR THE STRUCTURE (OBTAINED FROM THE COUNTY ENGINEER) WHICH THE CONTRATOR SHALL PLACE IN THE SURFACE OF THE FRESH CONCRETE. THE LOCATION OF THE DISC SHALL BE ON THE ABUTMENT, AND ON A FLAT, HORIZONTAL SUFACE BEYOND THE EDGE OF THE DECK AND RAILING. THE BENCHMARK SHALL BE ACCESSIBLE TO A SURVEYOR'S ROD WITHOUT ANY OBSTRUCTIONS. COST OF THIS WORK SHALL BE INCLUDED WITH ITEM 842.

PILES TO BEDROCK

PILES TO BEDROCK: DRIVE PILES TO REFUSAL ON BEDROCK. THE COUNTY WILL CONSIDER REFUSAL TO BE OBTAINED BY PENETRATING SOFT BEDROCK FOR SEVERAL INCHES TO A MINIMUM RESISTANCE OF 20 BLOWS PER INCH OR BY CONTACTING HARD BEDROCK AND THE PILE RECEIVING AT LEAST 20 BLOWS. SELECT THE HAMMER SIZE TO ACHIEVE THE REQUIRED DEPTH TO BEDROCK AND REFUSAL. THE TOTAL FACTORED LOAD IS 146.0 KIPS PER PILE FOR THE HP10X42 ABUTMENT PILES. THE TOTAL FACTORED LOAD IS 272.0 KIPS PER PILE FOR THE HP12X53 PIER PILES.

ABUTMENT PILES:
14 PILES 60 FEET LONG, ORDER LENGTH

PIER PILES:
5 PILES 60 FEET LONG, ORDER LENGTH

ITEM 507, STEEL POINTS, AS PER PLAN

ITEM 507, STEEL POINTS, AS PER PLAN: USE STEEL PILE POINTS TO PROTECT THE TIPS OF THE PROPOSED STEEL "H" PILING. FURNISH STEEL POINTS FROM THE FOLLOWING MANUFACTURES/SUPPLIERS: ASSOCIATEDPILE AND FITTING CORPORATION, 262 RUTHERFORD BLVD., CLIFTON, NEW JERSEY 07014, PHONE: (973)773-8400, (800)526-9047, FAX: (973)773-8442; INTERNATIONAL CONSTRUCTION EQUIPMENT, INC., 301 WAREHOUSE DRIVE, MATTHEWS, NORTH CAROLINA 28015, PHONE: (704)821-8200, (888)423-8721, FAX: (704)821-8201; DOUGHERTY FOUNDATION PRODUCTS, INC., P.O. BOX 688, FRANKLIN LAKES, NEW JERSEY 07417, PHONE: (201)337-5748, FAX: (201)337-9022; VERSA STEEL INC., 1618 N.E. FIRST AVE., PORTLAND, OREGON 97232, PHONE: (503)287-9822, (800)678-0814, FAX: (503)287-7483; VERSABITE PILING ACCESSORIES, 1704 TOWER INDUSTRIAL DR., MONROE, NORTH CAROLINA 28110, PHONE: (800)280-9950, (704)225-1566, FAX: (704)225-1567; OR BY A MANUFACTURER THAT CAN FURNISH A STEEL POINT THAT IS ACCEPTABLE TO DIRECTOR. THE MATERIAL USED FOR THE MANUFACTURING OF PILE POINTS SHALL CONFORM TO ASTM A27-A27M 65/35 [450/2401] - CLASS 2 - HEAT TREATED OR AASHTO M103/M103M 65/35 [450/2401] - HEAT TREATED. WELD THE PILE POINTS TO THE PILE IN ACCORDANCE WITH AWS D1.5 OR THE MANUFACTURER'S WRITTEN WELDING PROCEDURE SUPPLIED TO THE ENGINEER BEFORE THE WELDING IS PERFORMED. SUBMIT A NOTARIZED COPY OF THE MILL TEST REPORT TO THE ENGINEER.

PILE SPLICES

IN LIEU OF USING THE FULL PENETRATION BUTT WELDS SPECIFIED IN CMS 507.09 TO SPLICE STEEL H-PILES, THE CONTRACTOR MAY USE A MANUFACTURED H-PILE SPLICER. FURNISH SPLICERS FROM THE FOLLOWING MANUFACTURER:

ASSOCIATED PILE AND FITTING CORPORATION
262 RUTHERFORD BLVD.
CLIFTON, NEW JERSEY 07014

INSTALL AND WELD THE SPLICER TO THE PILE SECTIONS IN ACCORDANCE WITH THE MANUFACTURER'S WRITTEN ASSEMBLY PROCEDURE SUPPLIED TO THE ENGINEER BEFORE THE WELDING IS PERFORMED.

BEARING PAD SHIMS

PLACE 1/8" THICK PREFORMED BEARING PAD SHIMS (PLAN AREA TO MATCH THE BEARING DESIGN) UNDER THE ELASTOMERIC BEARING PADS WHERE REQUIRED FOR PROPER BEARING. FURNISH TWO SHIMS PER BEAM. MEASUREMENT OF THIS ITEM WILL BE BY THE TOTAL NUMBER SUPPLIED. THE COUNTY WILL PAY FOR ACCEPTED QUANTITIES AT THE CONTRACT PRICE FOR ITEM 516 - 1/8" PREFORMED BEARING PADS. ANY UNUSED SHIMS WILL BECOME THE PROPERTY OF THE COUNTY.

ESTIMATED QUANTITIES

CALC BY: JPM DATE: 11-09
CHKD BY: JRC DATE: 12-09

ITEM	EXTENSION	TOTAL	UNIT	DESCRIPTION	ABUTS.	PIER	SUPER.	GEN.	REFERENCE
202	11003		LUMP	STRUCTURE REMOVED, OVER 20 FOOT SPAN, AS PER PLAN				LUMP	3 OF 11
202	23500	260	SY	WEARING COURSE REMOVED			260		
407	10000	33	GAL	TACK COAT			33		
407	14000	18	GAL	TACK COAT FOR INTERMEDIATE COURSE			18		
448	46050	29	CY	ASPHALT CONCRETE INTERMEDIATE COURSE, TYPE 2, PG64-22			29		
448	47020	18	CY	ASPHALT CONCRETE SURFACE COURSE, TYPE 1, PG64-22			18		
503	11100		LUMP	COFFERDAMS, CRIBS, AND SHEETING				LUMP	
503	21101	412	CY	UNCLASSIFIED EXCAVATION, AS PER PLAN	412				3 OF 11
507	00100	840	FT	STEEL PILES HP10X42, FURNISHED	840				
507	00150	770	FT	STEEL PILES HP10x42, DRIVEN	770				
507	00200	300	FT	STEEL PILES HP12X53, FURNISHED		300			
507	00250	275	FT	STEEL PILES HP12x53, DRIVEN		275			
507	71200	70	FT	SPECIAL - PILE ENCASEMENT	70				
507	93301	19	EACH	STEEL POINTS OR SHOES, AS PER PLAN	14	5			2 OF 11
509	10000	11491	LB	EPOXY COATED REINFORCING STEEL	8590	2640	261		
511	34450	4	CY	CLASS S CONCRETE, MISC.: PIER "T" SECTION		4			
511	42500	12	CY	CLASS C CONCRETE, PIER CAP		12			
511	43500	81	CY	CLASS C CONCRETE, ABUTMENT INCLUDING FOOTING	81				
512	10100	177	SY	SEALING OF CONCRETE SURFACES (EPOXY-URETHANE)	57	35	85		
512	33010	443	SY	TYPE 3 WATERPROOFING			443		
515	10090	16	EACH	PRESTRESSED CONCRETE NON-COMPOSITE BOX BEAM BRIDGE MEMBERS, LEVEL 1, B33-48			16		
516	13200	28	SF	1/2" PREFORMED EXPANSION JOINT FILLER			28		
516	13600	177	SF	1" PREFORMED EXPANSION JOINT FILLER			177		
516	31300	65	FT	SPECIAL - POLYMER MODIFIED ASPHALT EXPANSION JOINT SYSTEM			65		
516	41100	32	EACH	1/8" PREFORMED BEARING PAD, 711.21	16	16			
516	43100	64	EACH	ELASTOMERIC BEARING WITH INTERNAL LAMINATES ONLY (NEOPRENE) (6"x10"x1.65" THICK)	32	32			
517	70000	249	FT	RAILING (TWIN STEEL TUBE)			249		
518	21200	65	CY	POROUS BACKFILL WITH FILTER FABRIC	65				
518	22300	242	FT	SPECIAL - STEEL DRIP STRIP			273		
518	40000	102	FT	6" PERFORATED CORRUGATED PLASTIC PIPE				102	
518	40010	42	FT	6" NON-PERFORATED CORRUGATED PLASTIC PIPE, INCLUDING SPECIALS				42	
526	25000	178	SY	REINFORCED CONCRETE APPROACH SLABS (T=15")				178	
601	32210	346	CY	ROCK CHANNEL PROTECTION, TYPE C WITH AGGREGATE FILTER				346	

ITEM SPECIAL - PILE ENCASEMENT

ENCASE ALL STEEL H-PILES FOR THE CAPPED PILE PIERS IN CLASS C CONCRETE. PROVIDE A CONCRETE SLUMP BETWEEN 6 TO 8 INCHES WITH THE USE OF A SUPERPLASTICIZER. PLACE THE CONCRETE WITHIN A FORM THAT CONSISTS OF POLYETHYLENE PIPE (707.33), OR PVC PIPE (707.42). THE ENCASEMENT SHALL EXTEND FROM 3 FEET BELOW THE FINISHED GROUND SURFACE UP TO THE CONCRETE PIER CAP. POSITION THE PIPE SO THAT AT LEAST 3 INCHES OF CONCRETE COVER IS PROVIDED AROUND THE EXTERIOR OF THE PILE.

IN LIEU OF ENCASING THE PILE IN CONCRETE, GALVANIZE THE PILES ACCORDING TO 711.02. THE GALVANIZING SHALL BE CONTINUOUS FROM A MINIMUM OF 3 FEET BELOW THE FINISH GROUND SURFACE UP TO THE CONCRETE PIER CAP. THE GALVANIZED COATING THICKNESS SHALL BE A MINIMUM OF 4 MILS. REPAIR ALL GOUGES, SCRAPES, SCRATCHES OR OTHER SURFACE IMPERFECTIONS CAUSED BY THE HANDLING OR THE DRIVING OF THE PILE TO THE SATISFACTION OF THE ENGINEER.

THE DEPARTMENT WILL MEASURE PILE ENCASEMENT BY THE NUMBER OF FEET. THE DEPARTMENT WILL DETERMINE THE SUM AS THE LENGTH MEASURED ALONG THE AXIS OF EACH PILE FROM THE BOTTOM OF THE ENCASEMENT TO THE BOTTOM OF THE PIER CAP. THE DEPARTMENT WILL NOT PAY FOR GALVANIZING PROVIDED BEYOND THE PROJECT REQUIREMENTS. THE DEPARTMENT WILL PAY FOR ACCEPTED QUANTITIES AT THE CONTRACT PRICE FOR: ITEM - SPECIAL, PILE ENCASEMENT.

DESIGN AGENCY
The Mannik & Smith Group, Inc.
1800 INDIAN WOOD CIRCLE MAUMEE, OHIO 43537
TEL: (419) 891-2222
FAX: (419) 891-2585

DESIGNED BCR
DRAWN BCR
REVIEWED RCH
DATE 12-09
REVISED -
CHECKED JPM
STRUCTURE FILE NUMBER 3536602

GENERAL NOTES & ESTIMATED QUANTITIES
M-7.75
COUNTY ROAD M OVER SOUTH TURKEYFOOT CREEK

HENRY C.R. M

w:\projects\projects f=\henc0016\cad\HENC0016_GN01.dgn 1/21/2010 11:40:57 AM

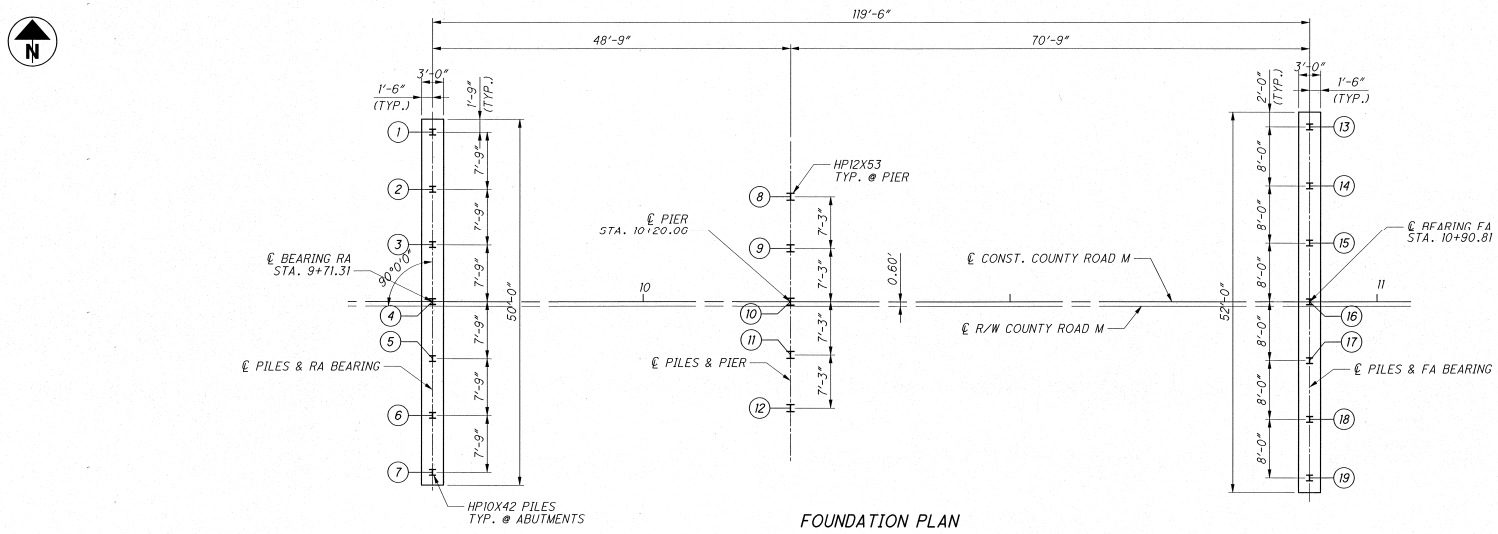

FOUNDATION PLAN

NOTES:

- ITEM 503, UNCLASSIFIED EXCAVATION, AS PER PLAN BACKFILL SHALL CONFORM TO CMS 503.08.

LEGEND:

RA = REAR ABUTMENT
FA = FORWARD ABUTMENT

- ITEM 202, STRUCTURE REMOVED, OVER 20 FT. SPAN, AS PER PLAN (FOR REMOVAL OF STRUCTURE ONLY AND INCLUDING EXCAVATION AS SHOWN WITHOUT BACKFILL)
- ITEM 503, UNCLASSIFIED EXCAVATION, AS PER PLAN (INCLUDES ALL ADDITIONAL EXCAVATION AND BACKFILL NECESSARY FOR PROPOSED STRUCTURE).

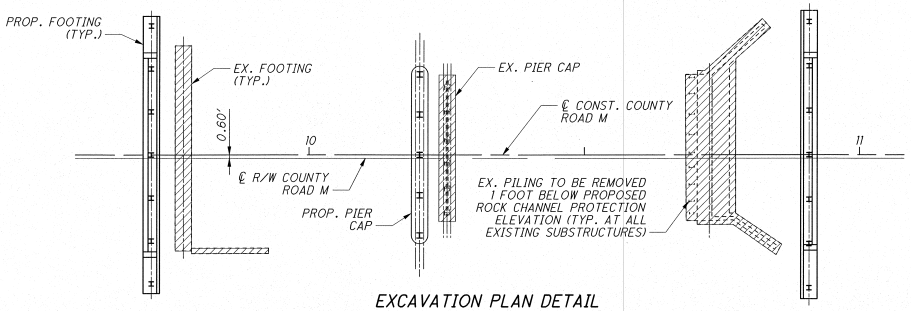

EXCAVATION PLAN DETAIL

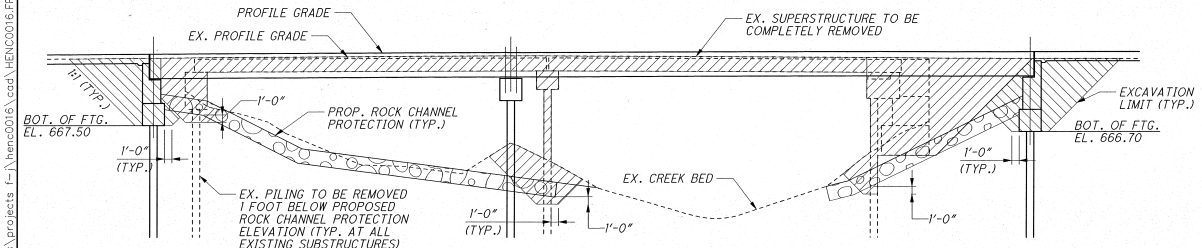

EXCAVATION - REMOVAL DETAIL

DESIGN AGENCY: The Mannik & Smith Group, Inc.
1900 INDIAN WOOD CIRCLE MAUMEE, OHIO 43537
TEL: (419) 891-2222 FAX: (419) 891-2266

DESIGNED	DRAWN	REVIEWED	DATE
JRC	JRC	RCH	12-09
CHECKED	REVISED	STRUCTURE FILE NUMBER	
JPM		3536602	

FOUNDATION PLAN AND REMOVAL DETAILS
M-7.75
COUNTY ROAD M OVER SOUTH TURKEYFOOT CREEK

HENRY C.R. M

3 / 11

13 / 21

w:\projects\projects f-j\henc0016\cad\HENC0016_FP001.dgn 1/21/2010 11:41:09 AM

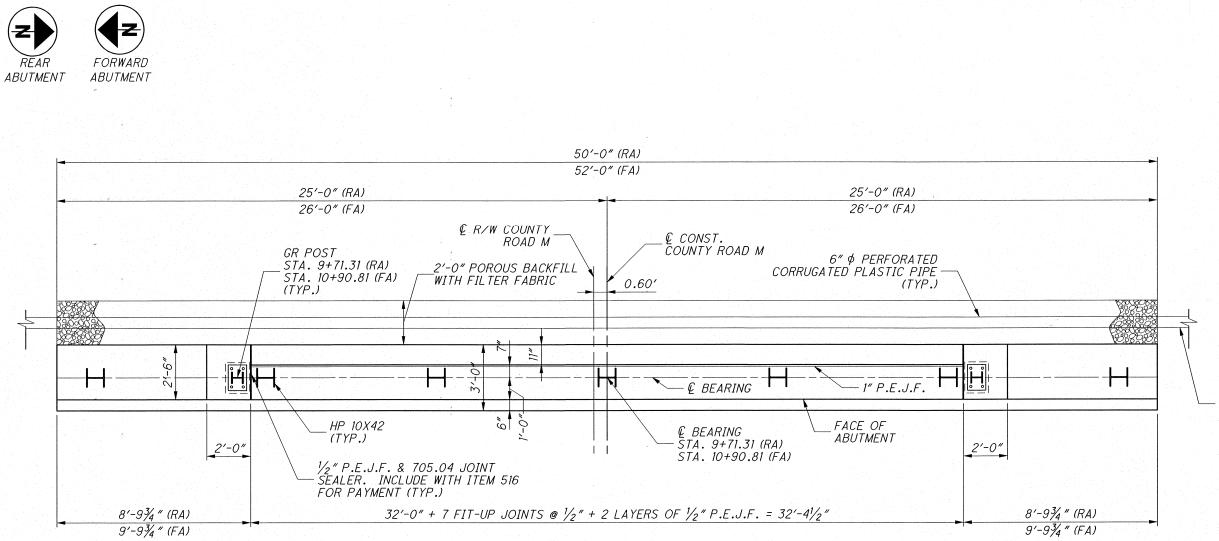

PLAN

(REAR ABUTMENT SHOWN, FORWARD SIMILAR OPPOSITE HAND)

LEGEND

RA = REAR ABUTMENT
FA = FORWARD ABUTMENT

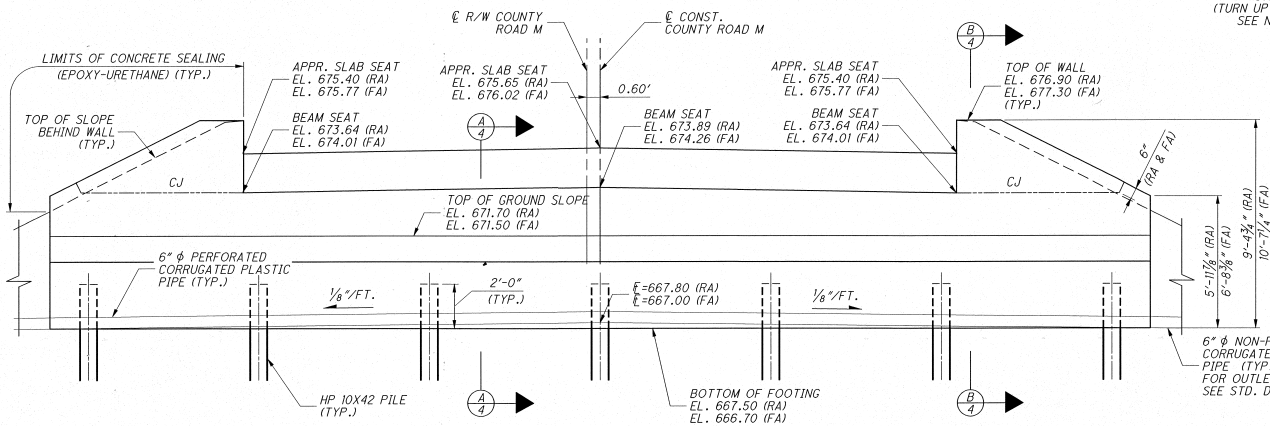

ELEVATION

(REAR ABUTMENT SHOWN, FOWARD SIMILAR OPPOSITE HAND)

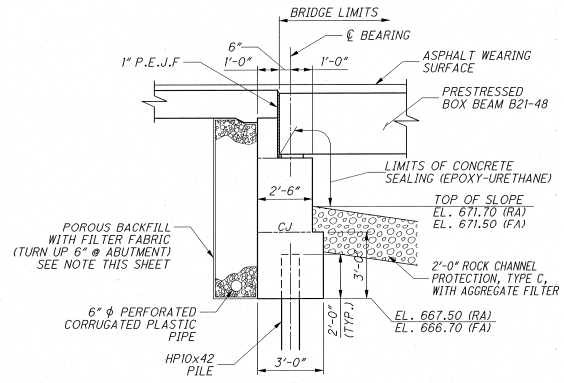

SECTION A-A

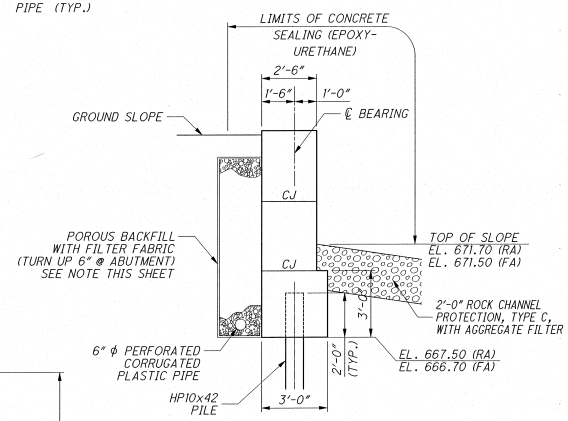

SECTION B-B

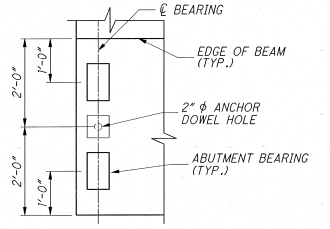

DETAIL A

(REAR ABUTMENT SHOWN, FORWARD SIMILAR OPPOSITE HAND)

NOTES

- POROUS BACKFILL WITH FILTER FABRIC PROCEDURE: 2 FEET THICK SHALL EXTEND UP TO THE PLANE OF SUBGRADE, TO 1 FOOT BELOW THE EMBANKMENT SURFACE, AND LATERALLY TO THE ENDS OF THE WINGWALLS.
- P.E.J.F. = PREFORMED EXPANSION FILLER
- EXPANSION ANCHOR DOWEL (REAR & FORWARD ABUTMENT) PROCEDURE: PLACE PREFORMED EXPANSION JOINT FILLER, DRILL AND CLEAN DOWEL HOLE, PLACE 705.04 JOINT SEALER AS PER STD. DWG. PSBD-1-93, DOWEL BAR, AND P.E.J.F. PLUG. INCLUDE WITH ITEM 515 FOR PAYMENT.
- ABUTMENT CONCRETE: DO NOT PLACE THE ABUTMENT BACK WALL OR WINGWALL CONCRETE ABOVE THE BRIDGE SEAT CONSTRUCTION JOINT UNTIL THE PRESTRESSED CONCRETE BOX BEAMS HAVE BEEN ERECTED.

The Mannik & Smith Group, Inc.
Civil Engineering, Surveying and Environmental Consulting

DESIGNED JRC
DRAWN JRC
CHECKED JPM
REVISED RCH
DATE 12-09
STRUCTURE FILE NUMBER 3536602

ABUTMENT DETAILS

M-7.75

COUNTY ROAD M OVER SOUTH TURKEYFOOT CREEK

HENRY C.R. M

4 / 11

14 / 21

w:\projects\projects f-j\henc0016\cad\HENC0016_AR001.dgn 1/21/2010 11:41:23 AM

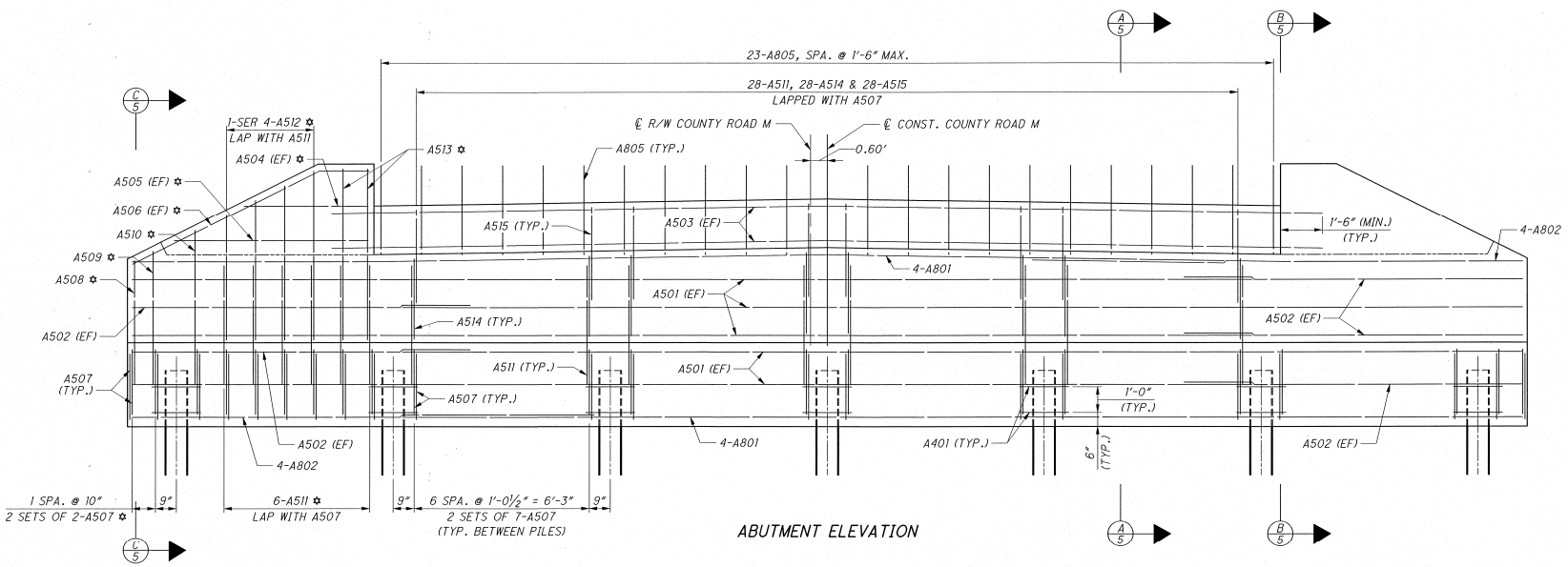

ABUTMENT ELEVATION

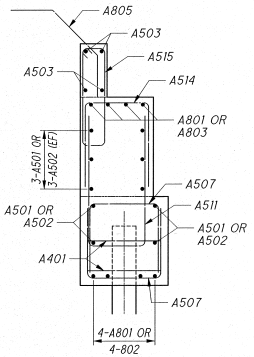

SECTION A-A

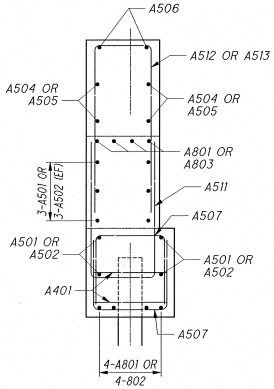

SECTION B-B

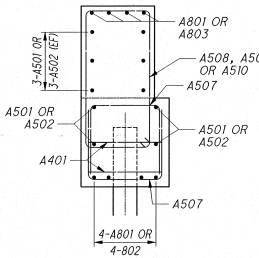

SECTION C-C

LEGEND

✡ - TYPICAL EACH END

EF = EACH FACE

NOTES

- REINFORCING STEEL IN THE VICINITY OF THE BRIDGE SEAT SHALL BE ACCURATELY PLACED TO AVOID INTERFERENCE WITH THE DRILLING OF ANCHOR BAR HOLES.
- SEE SHEET 4/11 FOR EXPANSION ANCHOR DOWEL DETAILS.
- MINIMUM CLEARANCE TO REINFORCING SHALL BE 2" UNLESS OTHERWISE NOTED:

  ALL #5 BAR LAP LENGTHS = 2'-5" (MIN.)
  ALL #8 BAR LAP LENGTHS = 7'-3" (MIN.)

DESIGN AGENCY
The Mannik & Smith Group, Inc.
1800 INDIAN WOOD CIRCLE MAUMEE, OHIO 43537
TEL: (419) 891-2222
FAX: (419) 891-1895

DATE 12-09
REVIEWED RCH
STRUCTURE FILE NUMBER 3536602
DRAWN BCR
REVISED
DESIGNED JRC
CHECKED JPM

REAR ABUTMENT REINFORCING DETAILS
M-7.75
COUNTY ROAD M OVER SOUTH TURKEYFOOT CREEK

HENRY C.R. M

5 / 11

15 / 21

w:\projects\projects f-i\henc0016\cad\HENC0016_AR002.dgn 1/21/2010 11:41:37 AM

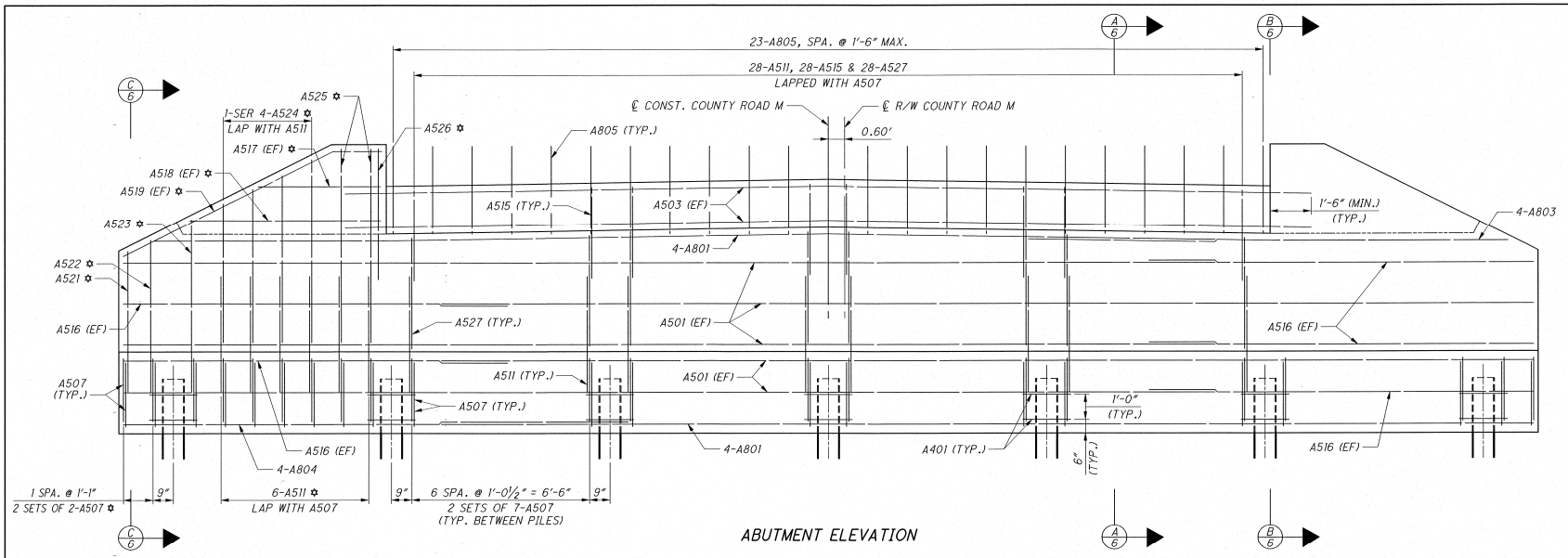

ABUTMENT ELEVATION

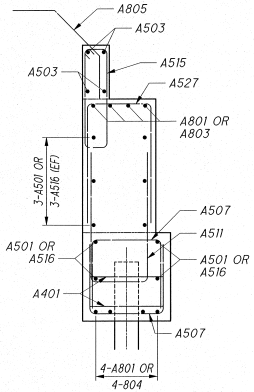

SECTION A-A

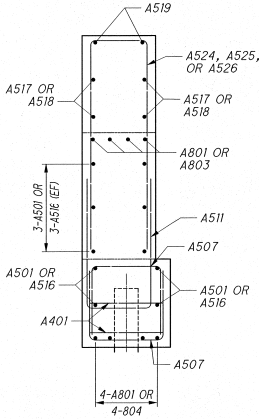

SECTION B-B

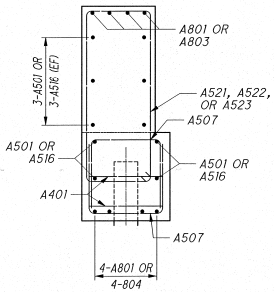

SECTION C-C

LEGEND

℄ - TYPICAL EACH END

EF = EACH FACE

NOTES

- REINFORCING STEEL IN THE VICINITY OF THE BRIDGE SEAT SHALL BE ACCURATELY PLACED TO AVOID INTERFERENCE WITH THE DRILLING OF ANCHOR BAR HOLES.
- SEE SHEET 4/11 FOR EXPANSION ANCHOR DOWEL DETAILS.
- MINIMUM CLEARANCE TO REINFORCING SHALL BE 2" UNLESS OTHERWISE NOTED:

  ALL #5 BAR LAP LENGTHS = 2'-5" (MIN.)
  ALL #8 BAR LAP LENGTHS = 1'-3" (MIN.)

DESIGN AGENCY
The Mannik & Smith Group, Inc.
1800 INDIAN WOOD CIRCLE MAUMEE, OHIO 43537
TEL: (419) 891-2222
FAX: (419) 891-2585

DESIGNED	DRAWN	REVIEWED	DATE
JRC	BCR	RCH	12-09
CHECKED	REVISED	STRUCTURE FILE NUMBER	
JPM		35336602	

FORWARD ABUTMENT REINFORCING DETAILS
M-7.75
COUNTY ROAD M OVER SOUTH TURKEYFOOT CREEK

HENRY C.R. M

6 / 11

16
21

w:\projects\projects f:\henc0016\cad\HENC0016.AR003.dgn 1/21/2010 11:41:46 AM

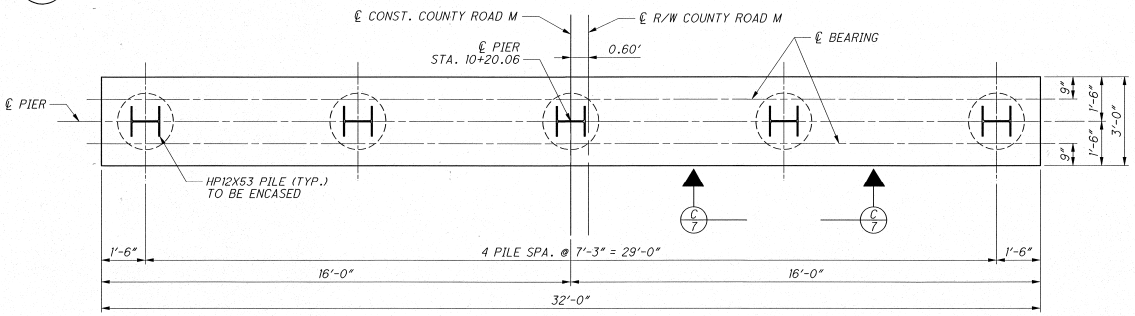

PLAN

NOTES

- FOR ADDITIONAL DETAILS, SEE ODOT STD. DWG. CPP-1-08
- ALL EXPOSED SURFACES, INCLUDING BOTTOM, ENDS, AND SIDES OF THE PIER SHALL BE SEALED WITH AN EPOXY URETHANE SEALER.
- SEALING OF BEAM SEATS: IF THE BEAM SEATS ARE SEALED WITH AN EPOXY OR NON-EPOXY SEALER PRIOR TO SETTING THE BEARINGS, DO NOT APPLY SEALER TO THE CONCRETE SURFACES UNDER THE PROPOSED BEARING LOCATIONS. IF THESE LOCATIONS ARE SEALED, REMOVE THE SEALER TO THE SATISFACTION OF THE ENGINEER PRIOR TO SETTING THE BEARINGS. THE DEPARTMENT WILL NOT PAY FOR THIS REMOVAL.
- MINIMUM CLEARANCE TO REINFORCING SHALL BE 2" UNLESS OTHERWISE NOTED.
- FOR BEAM CONNECTIONS OVER PIERS, ANCHOR DOWELS, AND FURTHER DETAILS, SEE SHEET 8 / 11 AND ODOT STD. DWG. PSBD-2-07.
- REINFORCING STEEL IN THE VICINITY OF THE BRIDGE SEAT SHALL BE ACCURATELY PLACED TO AVOID INTERFERENCE WITH THE DRILLING OF ANCHOR BAR HOLES.
- FIXED ANCHOR DOWEL (PIER) PROCEDURE: PLACE PREFORMED EXPANSION JOINT FILLER, DRILL AND CLEAN DOWEL HOLE. PLACE NON-SHRINKAGE GROUT AS PER STD. DWG. PSBD-2-07, DOWEL BAR, AND P.E.J.F. PLUG. INCLUDE WITH ITEM 515 FOR PAYMENT.
- E.F. - DENOTES EACH FACE

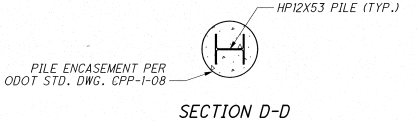

SECTION D-D

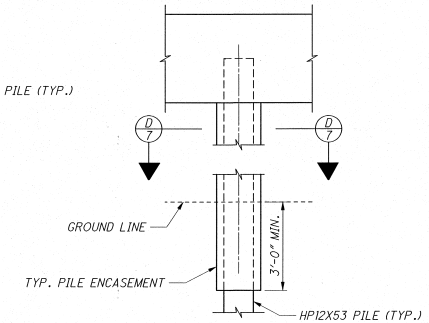

VIEW C-C

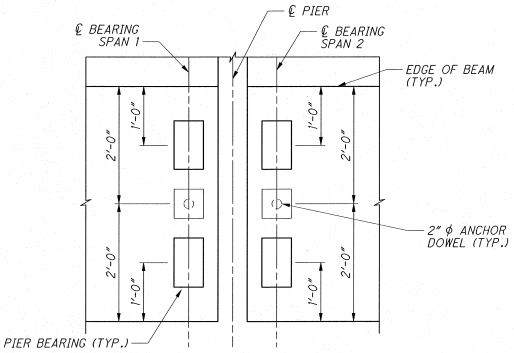

DETAIL A

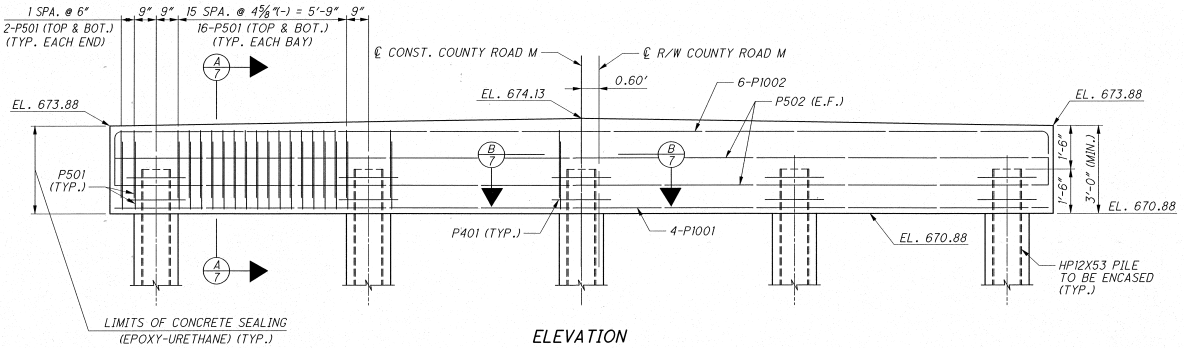

ELEVATION

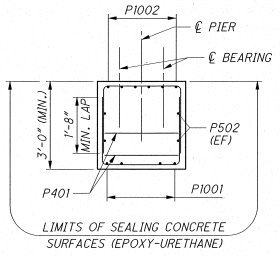

SECTION A-A

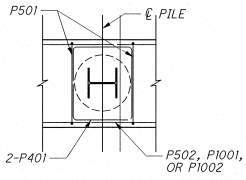

SECTION B-B

DESIGN AGENCY
Mannik & Smith Group, Inc.
1800 INDIAN WOOD CIRCLE, MAUMEE, OHIO 43537
TEL: (419) 891-2222
FAX: (419) 891-1888

DESIGNED	DRAWN	REVIEWED	DATE
JRC	BCR	RCH	12-09
CHECKED	REVISED	STRUCTURE FILE NUMBER	
JPM		3536602	

PIER DETAILS
M-7.75
COUNTY ROAD M OVER SOUTH TURKEYFOOT CREEK

HENRY C.R. M

7 / 11

17 / 21

w:\projects\projects f~\henc0016\cad\HENC0016_PI001.dgn 1/21/2010 11:41:57 AM

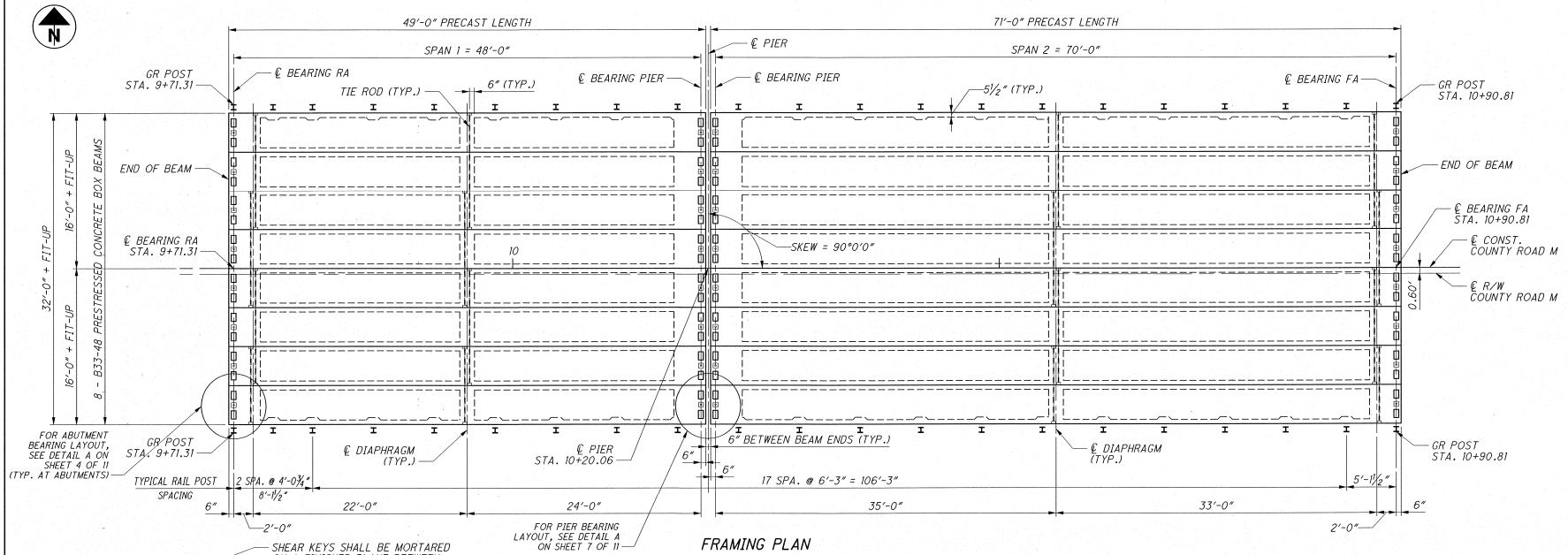

FRAMING PLAN

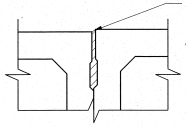

SHEAR KEY DETAIL

NOTES & LEGEND

- FOR ADDITIONAL PRESTRESSED BOX BEAM DETAILS, SEE ODOT STD. DWG. PSBD-2-07.
- FOR TWIN STEEL TUBE BRIDGE RAILING DETAILS, SEE ODOT STD. DWG. TST-1-99.
- P.E.J.F. = PREFORMED EXPANSION JOINT FILLER

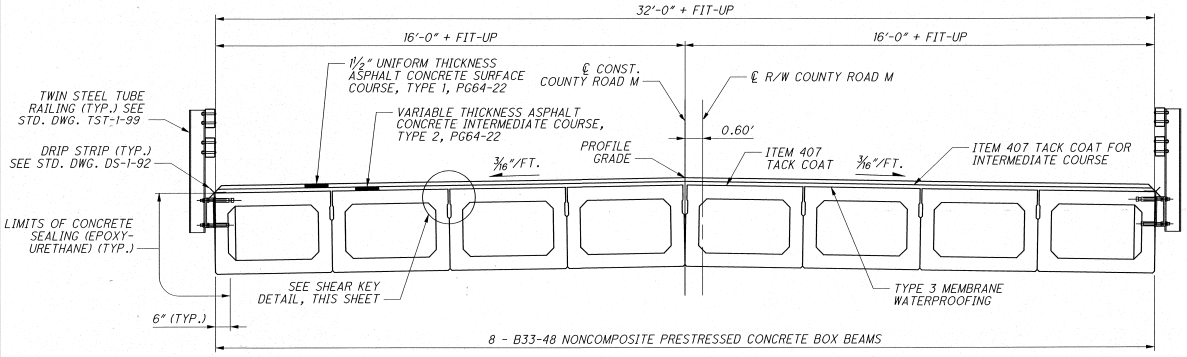

TRANSVERSE SECTION

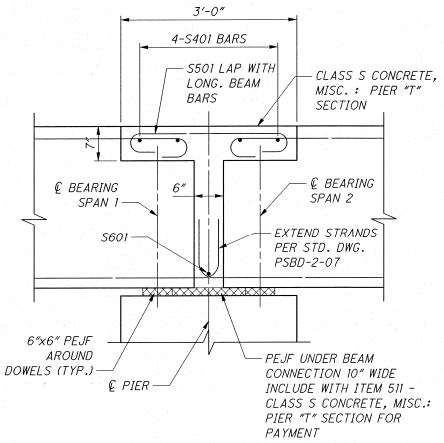

SUPERSTRUCTURE SECTION AT PIER

DESIGN AGENCY
Mannik & Smith Group, Inc.
1800 INDIAN WOOD CIRCLE, MAUMEE, OHIO 43537
TEL: (419) 891-2222
FAX: (419) 891-1555

DESIGNED JRC
DRAWN JRC
REVIEWED RCH
DATE 12-09
STRUCTURE FILE NUMBER 3536602
CHECKED JPM
REVISED

FRAMING PLAN AND TRANSVERSE SECTION
M-7.75
COUNTY ROAD M OVER SOUTH TURKEYFOOT CREEK

HENRY C.R. M

8 / 11

18 / 21

w:\projects\projects f-\henc0016\cad\HENC0016_TS001.dgn 1/21/2010 11:42:07 AM

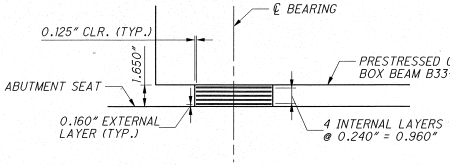

BEARING ELEVATION
(TYPICAL AT ALL SUBSTRUCTURES)

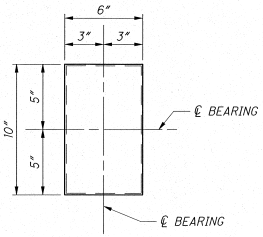

BEARING PLAN
(TYPICAL AT ALL SUBSTRUCTURES)

REAR ABUTMENT AND PIER (SPAN 1)
BEARING DESIGN LOADS:

DEAD LOAD	34.2 KIPS
LIVE LOAD WITHOUT IMPACT	25.5 KIPS
TOTAL	59.7 KIPS

FORWARD ABUTMENT AND PIER (SPAN 2)
BEARING DESIGN LOADS:

DEAD LOAD	48.4 KIPS
LIVE LOAD WITHOUT IMPACT	29.5 KIPS
TOTAL	77.9 KIPS

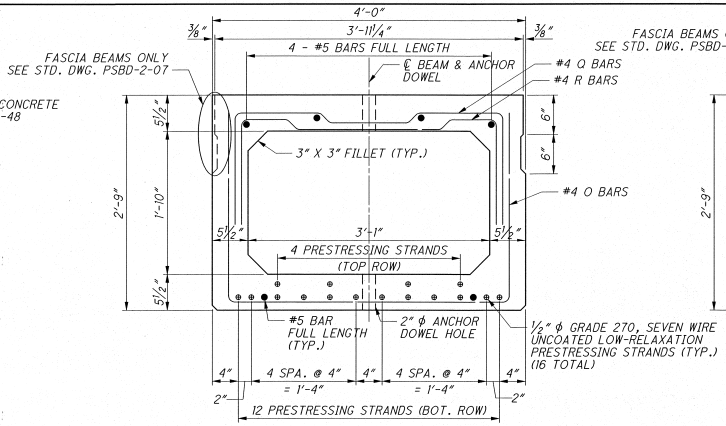

B33-48 PRESTRESSED CONCRETE BOX BEAM (SPAN 1)

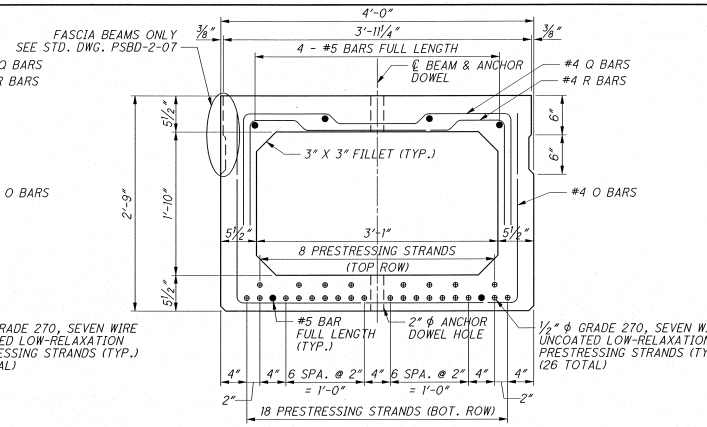

B33-48 PRESTRESSED CONCRETE BOX BEAM (SPAN 2)

NOTES

- PRESTRESSING STRAND:
  STRAND DESCRIPTION =½"ϕ (A = 0.167 IN²), GRADE 270, SEVEN WIRE, UNCOATED LOW RELAXATION PRESTRESSING STRAND
  ULTIMATE STRENGTH = 270 KSI
  INITIAL STRESS = 202,500 PSI (LOW RELAXATION STRANDS)
  INITIAL TENSION LOAD = 33.82 KIPS PER STRAND
- ASPHALT CONCRETE SURFACE COURSE: ASPHALT CONCRETE SUFRACE COURSE SHALL CONSIST OF A VARIABLE THICKNESS OF 448 ASPHALT CONCRETE INTERMEDIATE COURSE, TYPE 2, PG64-22 AND A 1½" THICKNESS OF 448 ASPHALT CONCRETE SURFACE COURSE, TYPE 1, PG64-22. PLACE THE 448 INTERMEDIATE COURSE IN TWO OPERATIONS. THE FIRST PORTION OF THE COURSE SHALL BE OF 1½" UNIFORM THICKNESS. FEATHER THE SECOND PORTION OF THE COURSE TO PLACE THE SURFACE PARALLEL TO AND ½" BELOW THE FINAL PAVEMENT SURFACE ELEVATION.
- ELASTOMERIC BEARINGS:
  THE ELASTOMER SHALL HAVE A HARDNESS OF 50 DUROMETER. THE BEARINGS WERE DESIGNED UNDER SECTION 14.7.6 (METHOD A) OF THE AASHTO LRFD BRIDGE DESIGN SPECIFICATIONS.
- CAMBER FOR B33-48 BOX BEAM (SPAN 1):
  CALCULATED CAMBER AT TIME OF RELEASE = ⅜"
  CALCULATED CAMBER AT TIME OF ERECTION = ¼"
  CALCULATED LONG-TERM CAMBER = 1"
- CAMBER FOR B33-48 BOX BEAM (SPAN 2):
  CALCULATED CAMBER AT TIME OF RELEASE = 1 ⅛"
  CALCULATED CAMBER AT TIME OF ERECTION = 2"
  CALCUALTED LONG-TERM CAMBER = 2 ⅛"
- SEE STD. DWG. PSBD-2-07 FOR ADDITIONAL BOX BEAM DETAILS.

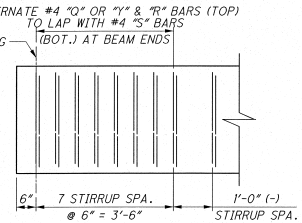

DETAIL "A"

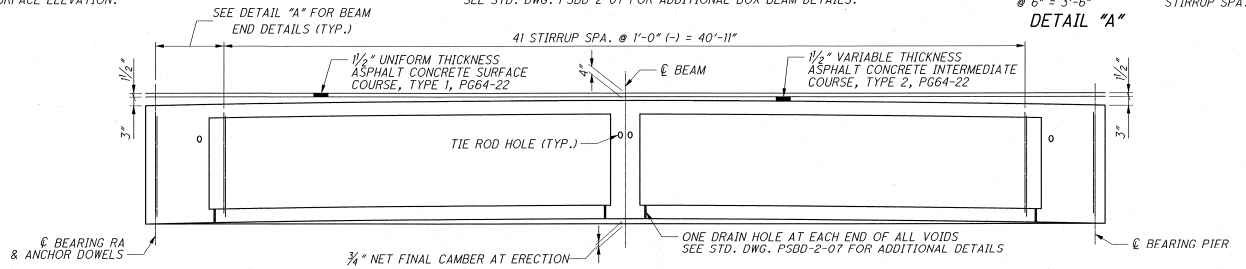

B33-48 CAMBER AND DEFLECTION (SPAN 1)

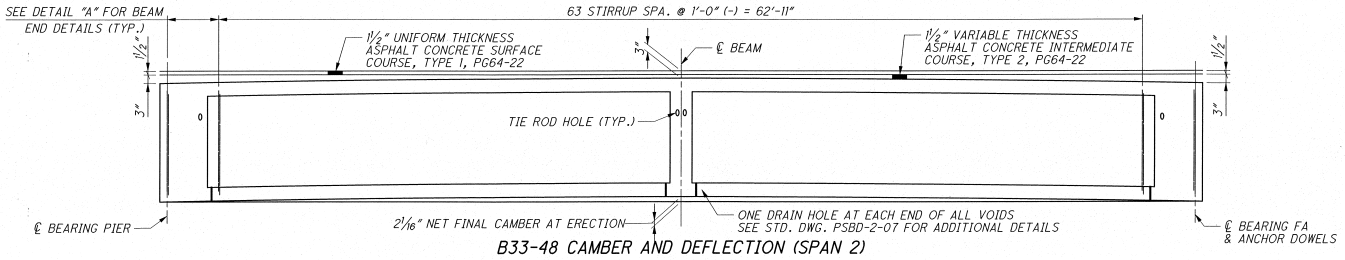

B33-48 CAMBER AND DEFLECTION (SPAN 2)

DESIGN AGENCY: The Mannik & Smith Group, Inc. — 1800 INDIAN WOOD CIRCLE MAUMEE, OHIO 43537 — TEL: (419) 891-2222 FAX: (419) 891-2585
DATE: 12-09
REVISED: RCH
STRUCTURE FILE NUMBER: 3536602
DRAWN: BCR
REVISED:
DESIGNED: JRC
CHECKED: JPM

SUPERSTRUCTURE DETAILS
M-7.75
COUNTY ROAD M OVER SOUTH TURKEYFOOT CREEK

HENRY C.R. M

9 / 11

19 / 21

w:\projects\projects f:\hencr0016\cad\HENCR0016_SD001.dgn 1/21/2010 11:42:18 AM

MARK	NUMBER			LENGTH	WEIGHT	TYPE	DIMENSIONS						
	REAR	FORWARD	TOTAL				A	B	C	D	E	R	INC
ABUTMENT REINFORCING													
A401	14	14	28	8'- 11"	167	3	2'-6"	1'-9"					
A501	10	10	20	40'- 0"	834	STR							
A502	10		10	12'- 1"	126	STR							
A503	4	4	8	35'- 5"	296	STR							
A504	4		4	4'- 5"	18	STR							
A505	4		4	6'- 11"	29	STR							
A506	4		4	9'- 3"	39	19	7'-6"	1'-7"	0'-9 1/2"				
A507	92	92	184	7'- 1"	1359	2	2'-5"	2'-6"	2'-5"				
A508	2		2	13'- 10"	29	3	2'-2"	4'-5"					
A509	2		2	14'- 6"	30	3	2'-2"	4'-9"					
A510	2		2	16'- 0"	33	3	2'-2"	5'-6"					
A511	40	40	80	10'- 5"	869	2	4'-3"	2'-2"	4'-3"				
A512	2 SR OF 4		2 SR OF 4	10'- 9" TO 13'- 11"	103	2	4'-5" TO 6'-0"	2'-2"	4'-5" TO 6'-0"				1'-0 3/4"
A513	4		4	14'- 3"	59	2	6'-2"	2'-2"	6'-2"				
A514	28		28	7'- 7"	221	2	2'-10"	2'-2"	2'-10"				
A515	28	28	56	8'- 6"	496	3	0'-7"	3'-4"					
A516		10	10	14'- 1"	147	STR							
A517		4	4	4'- 6"	19	STR							
A518		4	4	7'- 0"	29	STR							
A519		4	4	10'- 2"	42	19	8'-7"	1'-5"	0'-9 1/2"				
A520	NOT USED												
A521		2	2	15'- 4"	32	3	2'-2"	5'-2"					
A522		2	2	16'- 2"	34	3	2'-2"	5'-7"					
A523		2	2	17'- 8"	37	3	2'-2"	6'-4"					
A524		2 SR OF 4	2 SR OF 4	12'- 3" TO 15'- 5"	115	2	5'-2" TO 6'-9"	2'-2"	5'-2" TO 6'-9"				1'-0 3/4"
A525		4	4	16'- 1"	67	2	7'-1"	2'-2"	7'-1"				
A526		2	2	11'- 5"	24	2	4'-9"	2'-2"	4'-9"				
A527		28	28	10'- 1"	294	2	4'-1"	2'-2"	4'-1"				
A801	8	8	16	40'- 0"	1709	STR							
A802	8		8	17'- 0"	363	STR							
A803		4	4	17'- 6"	187	STR							
A804		4	4	18'- 9"	200	STR							
A805	23	23	46	4'- 9"	583	13	1'-5"	1'-5"	1'-5"	1'-5"			
SUB-TOTAL					8590								

MARK	NUMBER	LENGTH	WEIGHT	TYPE	DIMENSIONS						
	TOTAL				A	B	C	D	E	R	INC
PIER REINFORCING											
P401	10	9'- 5"	63	3	2'-6"	2'-0"					
P501	136	7'- 1"	1005	2	2'-4"	2'-8"	2'-4"				
P502	4	31'- 8"	132	STR							
P1001	4	31'- 8"	545	STR							
P1002	6	34'- 8"	895	2	1'-10"	31'-8"	1'-10"				
SUB-TOTAL			2640								

MARK	NUMBER	LENGTH	WEIGHT	TYPE	DIMENSIONS						
	TOTAL				A	B	C	D	E	R	INC
SUPERSTRUCTURE REINFORCING											
S401	4	31'- 8"	85	STR							
S501	32	3'- 10"	128	17	2'-8"						
S601	1	31'- 8"	48	STR							
SUB-TOTAL			261								

BENDING DIAGRAMS

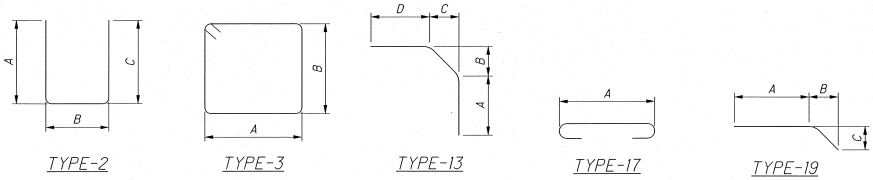

NOTES

- BAR DIMENSIONS SHOWN ARE OUT TO OUT UNLESS OTHERWISE INDICATED. "R" INDICATES INSIDE RADIUS, UNLESS OTHERWISE NOTED. "STD." WRITTEN IN PLACE OF A DIMENSION INDICATES A STANDARD BEND AT THE END OF THE BAR.
- ALL REINFORCING STEEL TO BE EPOXY COATED.
- BAR SIZE IS INDICATED IN THE BAR MARK. THE FIRST TWO DIGITS INDICATE THE BAR SIZE NUMBER. EXAMPLE A501 IS A NO. 5 SIZE BAR.

DESIGN AGENCY
The Mannik & Smith Group, Inc.
1800 INDIAN WOOD CIRCLE MAUMEE, OHIO 43537
TEL: (419) 891-2222 FAX: (419) 891-2585

DATE 12-09
REVIEWED RCH
STRUCTURE FILE NUMBER 35336602
DRAWN BCR
REVISED
DESIGNED BCR
CHECKED JPM

REINFORCING LIST
M-7.75
COUNTY ROAD M OVER SOUTH TURKEYFOOT CREEK

HENRY C.R. M

10 / 11

20 / 21

w:\projects\projects f-i\henc0016\cad\HENC0016RL001.dgn 1/21/2010 11:42:25 AM

GENERAL NOTES AND DETAILS FOR POLYMER MODIFIED ASPHALT EXPANSION JOINT SYSTEM

ITEM SPECIAL - POLYMER-MODIFIED ASPHALT EXPANSION JOINT SYSTEM

THIS ITEM WILL BE USED TO SEAL THE EXPANSION/CONTRACTION JOINTS AS PER THESE DETAILS AND THE MANUFACTURER'S REQUIREMENTS USING A POLYMER-MODIFIED ASPHALT SYSTEM. THE PRIME CONTRACTOR WILL OBTAIN THE SERVICES OF ONE OF THE FOLLOWING APPROVED APPLICATORS WHO WILL FURNISH AND INSTALL THE NEW BRIDGE EXPANSION JOINT SYSTEM AFTER ALL PAVING ON THE AFFECTED BRIDGE(S) HAS BEEN COMPLETED.

PRODUCT NAME	SUPPLIER	ADDRESS	PHONE NO.
THORMA-JOINT	DYNAMIC SURFACE APPLICATIONS, LTD	373 VILLAGE RD. PENNSDALE, PA 17756	(570)546-6041
MATRIX 502	CRAFCO INC.	420 N. ROOSEVELT AVE. CHANDLER, AZ 85226	(800)528-8242
EXPANDEX JOINT SYSTEM	WATSON-BOWMAN ACME	95 PINEVIEW DR. AMHERST, NY 14228	(716)691-7566
APJ ASPHALTIC PLUG EXPANSION JOINT	WYOMING EQUIPMENT SALES	281 SIXTH STREET P.O. BOX 287 WEST WYOMING, PA 18644	(570)693-2810

MATERIALS:

BRIDGING PLATE:

MILD STEEL 1/8" OR 1/4" THICK PLATE, 8" WIDE OR 18 GAUGE ALUMINUM, 8" WIDE.

BINDER:

TYPE:	POLYMER MODIFIED ASPHALT
SOFTENING POINT:	180 DEGREES F. MIN.
FLOW:	3 mm. MAX. AT 140 DEGREES F.
PENETRATION:	9 mm. MAX. AT 77 DEGREES F. 1 mm. MIN AT 0 DEGREES F. ASTM D 3407
DUCTILITY:	40 cm. MIN. ASTM D 113
RESILIENCE:	60% MIN. AT 77 DEGREES F.
TENSILE ADHESION:	700% MIN.
SPECIFIC GRAVITY:	1.10 * 0.05
POURING TEMP:	350 - 390 DEGREES F.

AGGREGATE:

TYPE:	CRUSHED, DOUBLE WASHED, AND DRIED GRANITE OR BASALT
GRADATION:	THE GRADATION OF THE AGGREGATE VARIES BY MANUFACTURER AND WILL BE AS PER THE MANUFACTURER'S RECOMMENDATIONS FOR THE SYSTEM BEING USED ON THIS PROJECT.

BACKER ROD:

THE BACKER SHALL BE A CLOSED CELL FOAM EXPANSION JOINT FILLER CAPABLE OF WITHSTANDING THE PLACEMENT TEMPERATURE OF THE POLYMER MODIFIED ASPHALT.

NOTE: PRIOR TO PLACEMENT OF ANY PORTION OF THE JOINT SYSTEM, THE PROJECT ENGINEER MUST HAVE CERTIFIED TEST DATA MEETING ALL THE MINIMUM REQUIREMENTS OF ALL THE MATERIALS OF THE JOINT SYSTEM.

INSTALLATION PROCEDURES:

SAWING AND SURFACE PREPARATION:

AFTER ALL PAVING OPERATIONS ARE COMPLETE, THE OVERLAY IS TO BE TRANSVERSELY SAW CUT FULL DEPTH NO LESS THAN TWO INCHES DEEP (20" CENTERED OVER JOINT OPENING, UNLESS OTHERWISE NOTED). REMOVE ALL MATERIAL, INCLUDING WATER-PROOFING MATERIAL, BETWEEN SAW CUTS. THOROUGHLY CLEAN AND DRY EXPOSED CONCRETE, STEEL, AND CUT SURFACES USING COMPRESSED AIR AND A HOT COMPRESSED AIR (HCA) LANCE. THE LANCE MUST PRODUCE A FLAME RETARDED AIR STREAM TEMPERATURE OF 3000 DEGREES F. AT A VELOCITY OF 3,000 FEET PER SECOND WITH 15 PSIG CHAMBER PRESSURE. IF THERE IS AN INTERRUPTION DUE TO WEATHER OR OTHER CAUSES, THE OPERATION WILL BE REPEATED WITH THE HCA LANCE IMMEDIATELY BEFORE THE BINDER COAT OPERATION. ALSO, 6 INCHES OF THE ROAD SURFACE ON EITHER SIDE OF THE JOINT WILL BE DRIED SO THAT A SUITABLE SURFACE FOR BITUMEN ADHESION IS OBTAINED.

SEALING OF EXPANSION JOINT: (PRE-STRESSED BOX OR CONCRETE SLAB)

THE EXPANSION JOINT GAP IS TO BE SEALED AND A BRIDGING PLATE CENTERED ALONG IT. A VERY NARROW GAP WILL BE SEALED BY POURING HOT BINDER INTO THE GAP. GAPS OF 1/8" OR MORE WILL FIRST BE FILLED WITH AN APPROPRIATELY SIZED BACKER ROD. THE BACKER ROD WILL BE INSTALLED SO THAT IT IS BETWEEN 1/8" AND 1/16" BELOW THE TOP OF THE EXISTING GAP. THE GAP WILL THEN BE FILLED WITH BINDER.

BOND BREAKER:

SPREAD BINDER OVER SURFACE AREA WHERE THE METAL BRIDGING PLATE WILL BE PLACED. CENTER THE BRIDGING PLATE OVER THE EXISTING JOINT AND BED INTO THE HOT BINDER. BUTT JOINT THE BRIDGING PLATES TO ACCOMODATE THE ENTIRE JOINT LENGTH. SPIKE HOLES WILL BE DRILLED AT 1 FOOT INTERVALS ALONG THE LONGITUDINAL CENTERLINE OF THE PLATES. SECURE BRIDGING PLATE WITH NAILS OR SPIKES. SEAL BUTT JOINTS WITH HOT BINDER AND ALLOW BINDER TO SETUP BEFORE NEXT OPERATION. WHEN ALUMINUM BRIDGING PLATES ARE USED, ONLY THE BINDER IS REQUIRED TO SECURE THE INDIVIDUAL PLATES.

BINDER COAT:

SEAL ALL PREPARED, EXPOSED SURFACES OF THE JOINT WITH BINDER. POUR THE HOT BINDER OVER THE FLOOR AREA OF THE JOINT AND SPREAD TO COAT ALL EXPOSED SURFACES. THE BINDER WILL BE A MINIMUM OF 1/32" THICK ON THE BOTTOM OF THE JOINT CAVITY, WITH POOLS OF GREATER THICKNESS WHERE SURFACE IRREGULARITIES EXIST. THE BINDER APPLICATION TEMPERATURE WILL BE BETWEEN 350 AND 390 DEGREES F. THE BINDER WILL NOT BE ALLOWED TO BE HEATED ABOVE 410 DEGREES F. NOR ALLOWED TO EXCEED 390 DEGREES F. FOR MORE THAN 1 HOUR. A DOUBLE JACKETED OIL MELTER WILL BE USED TO HEAT THE BINDER. THE MELTER WILL BE EQUIPPED WITH A CONTINUOUS AGITATION SYSTEM, TEMPERATURE CONTROLS, AND A CALIBRATED THERMOMETER. ALSO A SYSTEM FOR ACCURATELY MEASURING THE WEIGHTS OF THE BINDER AND THE AGGREGATE WILL BE REQUIRED.

BUILD-UP OF JOINT LAYERS:

AGGREGATE PREPARATION:

HEAT THE AGGREGATE TO A TEMPERATURE OF 275 TO 325 DEGREES F., WITH A SUITABLE ROTATING DRUM WITH ATTACHED HEAT SOURCE OR A HOT COMPRESSED AIR LANCE, TO REMOVE DUST AND MOISTURE.

AGGREGATE PROPORTION AND LAYER THICKNESS:

MIX THE AGGREGATE WITH THE BINDER SUCH THAT THE MINIMUM AGGREGATE CONTENT BY WEIGHT WILL BE 68%. THE HEATED AGGREGATE AND BINDER WILL BE COMBINED IN LAYERS, UNLESS PATENTED INSTALLATION REQUIRES DIFFERENTLY, NOT LESS THAN 3/4 OF AN INCH NOR EXCEEDING 2-1/2 INCHES. THE THICKNESS OF EACH LAYER CAN BE VARIED WITHIN THESE LIMITS, TO ACHIEVE THE REQUIRED JOINT THICKNESS (MIN. 2 INCHES). THE OBJECTIVE IS TO COAT EACH STONE AND FILL THE VOIDS WHILE AVOIDING AN EXCESS OF BINDER. THIS WILL ACHIEVE THE MAXIMUM CONTENT OF STONE CONSISTENT WITH ALL STONES BEING COATED WITH BINDER. RAKE THE MIXTURE TO MIX AND LEVEL.

THE TOP LAYER THICKNESS WILL VARY BETWEEN 1/2 INCH AND ONE (1) INCH. IN PREPARING THE TOP LAYER, THE RATIO OF AGGREGATE TO BINDER WILL BE APPROXIMATELY 6:1 BY WEIGHT. OVERFILL THE TOP LAYER AND COMPACT TO THE LEVEL OF THE ADJACENT SURFACES USING A ROLLER OR VIBRATORY PLATE COMPACTOR. IMMEDIATELY AFTER COMPLETION OF THE COMPACTION, POUR SUFFICIENT BINDER OVER THE JOINT TO FILL THE SURFACE VOIDS AND COAT THE SURFACE STONE. DUST THE FINISHED JOINT WITH A FINE, DRY AGGREGATE TO PREVENT TACKINESS.

MAINTENANCE OF TRAFFIC:

IF NECESSARY TO FACILITATE TRAFFIC MAINTENANCE, THE JOINT WILL BE INSTALLED IN TWO (2) HALF-WIDTH PHASES. DURING PHASE 1 APPROXIMATELY HALF OF THE TOTAL JOINT WILL BE INSTALLED. DURING PHASE 2, A MINIMUM OF TWO (2) INCHES OF THE PHASE 1 JOINT WILL BE REMOVED, AT OR NEAR THE CENTERLINE, WITH THE REMAINDER OF THE JOINT INSTALLED. IN ALL CASES, OPERATIONS WILL BE SCHEDULED SO THAT ALL LANES CAN BE OPEN TO TRAFFIC DURING ALL NON-WORKING HOURS.

TESTING:

CERTIFICATION WILL BE SUPPLIED FOR EACH PROJECT SHOWING BINDER COMPLIANCE WITH REQUIRED PROPERTIES. A ONE QUART SAMPLE OF BINDER WILL BE RETRIEVED FROM EACH BRIDGE FOR FURTHER TESTING BY THE O.D.O.T OFFICE OF MATERIALS MANAGEMENT.

METHOD OF MEASUREMENT AND BASIS OF PAYMENT:

THE DEPARTMENT WILL MEASURE THE JOINT BY THE NUMBER OF FEET AND WILL PAY FOR ACCEPTED QUANTITIES AT THE CONTRACT PRICE AS: ITEM SPECIAL, FEET, POLYMER MODIFIED ASPHALT EXPANSION JONT SYSTEM.

THE DEPARTMENT WILL MEASURE THE JOINT BY THE NUMBER OF CUBIC YARDS AND WILL PAY FOR ACCEPTED QUANTITIES AT THE CONTRACT PRICE AS: ITEM SPECIAL, CUBIC YARD, POLYMER MODIFIED ASPHALT EXPANSION JONT SYSTEM.

DESIGNER TO USE ONLY ONE AND MODIFY SHEET ACCORDINGLY.

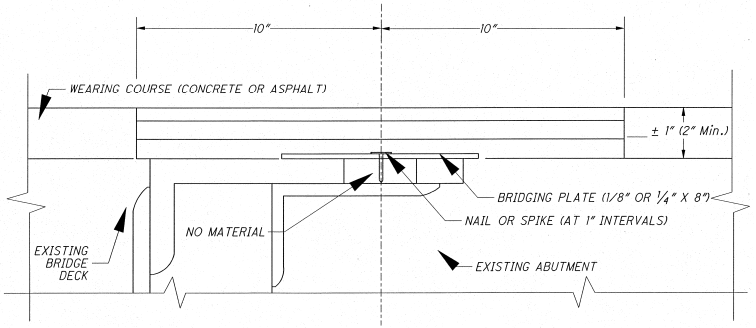

TYPICAL STEEL BEAM EXPANSION JOINT

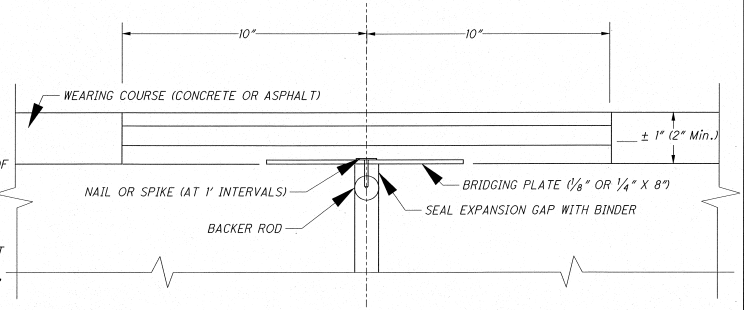

TYPICAL PRESTRESSED BOX BEAM OR CONCRETE SLAB JOINT

OFFICE OF STRUCTURAL ENGINEERING

DESIGNED | CHECKED | REVIEWED

PLAN INSERT SHEET

POLYMER MODIFIED ASPHALT EXPANSION JOINT SYSTEM

HENRY C.R.M

11 / 11

21 / 21

w:\projects\projects f:\henc0016\cad\POLY_04-15-05_V8.dgn 1/21/2010 11:42:31 AM