STATE OF OHIO

DEPARTMENT OF TRANSPORTATION

HEN-NEW MAUMEE RIVER BRIDGE

CITY OF NAPOLEON

HARRISON TOWNSHIP

HENRY COUNTY

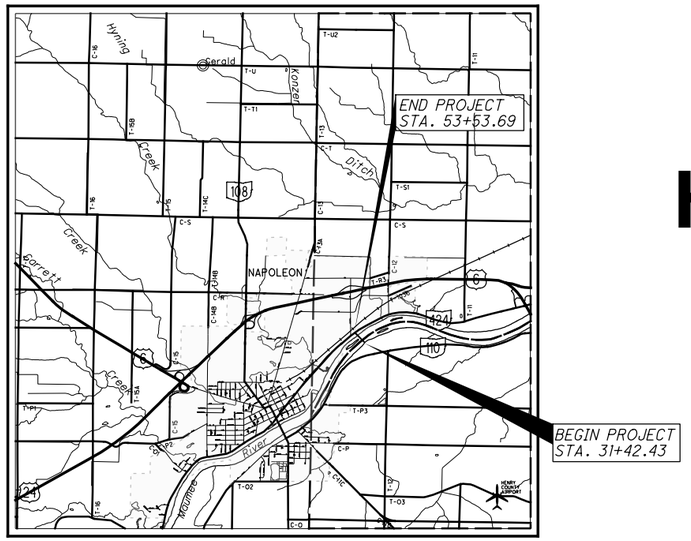

LOCATION MAP

LATITUDE: 41°24'17" LONGITUDE: 84°06'14"

SCALE IN MILES

0 1 2 3 4

N

PORTION TO BE IMPROVED
INTERSTATE HIGHWAY
FEDERAL ROUTES
STATE ROUTES
COUNTY & TOWNSHIP ROADS
OTHER ROADS

DESIGN DESIGNATION

SEE SCHEMATIC SHEET X

NHS PROJECT NO

DESIGN EXCEPTIONS

INDEX OF SHEETS:

TITLE SHEET	1
SCHEMATIC PLAN	2
BENCHMARKS & HORIZONTAL CONTROL	3
TYPICAL SECTIONS	4-8
GENERAL NOTES	9
PLAN AND PROFILE (INDUSTRIAL DR.)	10-13
PLAN AND PROFILE (RIVERVIEW AVE.)	14-16
PLAN AND PROFILE (S.R. 110)	17-19
CROSS SECTIONS (INDUSTRIAL DR.)	20-26
CROSS SECTIONS (RIVERVIEW AVE.)	27-33
CROSS SECTIONS (S.R. 110)	34-40
ROUNDABOUT GEOMETRIC DETAILS	41-45
ROUNDABOUT GRADING DETAILS	46
DRIVE DETAILS	47
DRIVE PROFILES	48
TRAFFIC CONTROL	49-54
STRUCTURES 20' AND OVER	55-59
SOIL PROFILES/ FOUNDATION INVESTIGATIONS	

PROJECT DESCRIPTION

EXTENSION OF INDUSTRIAL DRIVE OVER THE MAUMEE RIVER. THE PROJECT INCLUDE THE CONSTRUCTION OF A NEW STRUCTURE, NEW ROADWAY FROM RIVERVIEW AVE. TO S.R. 110, THE RECONSTRUCTION OF INDUSTRIAL DR., RIVERVIEW AVE. AND S.R. 110 AND TWO ROUNDABOUTS.

PROJECT EARTH DISTURBED AREA: 8.10 ACRES
ESTIMATED CONTRACTOR EARTH DISTURBED AREA: 1.80 ACRES
NOTICE OF INTENT EARTH DISTURBED AREA: 9.90 ACRES

I HEREBY APPROVE THESE PLANS AND DECLARE THAT THE MAKING OF THIS IMPROVEMENT WILL REQUIRE THE PART TIME CLOSING OF THE HIGHWAY TO TRAFFIC, AS NOTED ON SHEET . DURING WHICH TIME DETOURS WILL BE PROVIDED AS SHOWN HEREIN. PROVISIONS FOR THE MAINTENANCE AND SAFETY OF TRAFFIC WILL BE AS SET FORTH ON THE PLANS AND ESTIMATES.

2013 SPECIFICATIONS

THE STANDARD SPECIFICATIONS OF THE STATE OF OHIO, DEPARTMENT OF TRANSPORTATION, INCLUDING CHANGES AND SUPPLEMENTAL SPECIFICATIONS LISTED IN THE PROPOSAL SHALL GOVERN THIS IMPROVEMENT.

STAGE 1 SUBMITTAL
SEPT. 10, 2014

UNDERGROUND UTILITIES

CONTACT BOTH SERVICES
CALL TWO WORKING DAYS
BEFORE YOU DIG

CALL
1-800-362-2764
(TOLL FREE)
OHIO UTILITIES PROTECTION SERVICE
NON-MEMBERS
MUST BE CALLED DIRECTLY

OIL & GAS PRODUCERS UNDERGROUND
PROTECTION SERVICE CALL: **1-800-925-0988**

PLAN PREPARED BY:

Mannik Smith GROUP
TECHNICAL SKILL. CREATIVE SPIRIT.
www.MannikSmithGroup.com

ENGINEERS SEAL:

SIGNED:
DATE:

ENGINEERS SEAL:

SIGNED:
DATE:

STANDARD CONSTRUCTION DRAWINGS					SUPPLEMENTAL SPECIFICATIONS	SPECIAL PROVISIONS

APPROVED
DATE DISTRICT DEPUTY DIRECTOR

APPROVED
DATE DIRECTOR, DEPARTMENT OF TRANSPORTATION

FEDERAL PROJECT NO. G020069

PID NO. 22984

CONSTRUCTION PROJECT NO.

RAILROAD INVOLVEMENT
MICHIGAN SOUTHERN RAILROAD

HEN-NEW MAUMEE RIVER BRIDGE

W:\Projects\Projects F-J\H2530002\22984\roadway\sheets\22984GT001.dgn 9/10/2014 5:17:56 PM SValentin

S.R. 110
CURVE DATA
P.I.STA. 97+48.28
Δ = 21° 40′ 09″ (RT)
Dc = 2° 00′ 00″
R = 2,864.80′
T = 548.28′
L = 1,083.46′
E = 51.99′
emax = 0.045

S.R. 110
CURVE DATA
P.I.STA. 103+94.64
Δ = 20° 59′ 50″ (LT)
Dc = 9° 32′ 57″
R = 600.00′
T = 111.19′
L = 219.88′
E = 10.22′
emax = NC

S.R. 110
EX. CURVE DATA
P.I.STA. 90+33.37
Δ = 49° 52′ 00″ (RT)
Dc = 2° 00′ 00″
R = 2,864.80′
T = 1,331.82′
L = 2,493.34′
E = 294.45′
emax=0.045

S.R. 110
CURVE DATA
P.I.STA. 105+83.15
Δ = 18° 08′ 21″ (RT)
Dc = 11° 27′ 33″
R = 500.00′
T = 79.81′
L = 158.29′
E = 6.33′
emax = NC

S.R. 110
CURVE DATA
P.I.STA. 107+61.70
Δ = 11° 25′ 43″ (RT)
Dc = 5° 43′ 46″
R = 1,000.00′
T = 100.06′
L = 199.47′
E = 4.99′
emax = NC

S.R. 110
CURVE DATA
P.I.STA. 111+03.62
Δ = 10° 20′ 30″ (LT)
Dc = 2° 08′ 16″
R = 2,680.00′
T = 242.53′
L = 483.74′
E = 10.95′
emax = NC

BEGIN WORK
STA. 100+50.00

PT STA. 101+94.89

PRC STA. 102+83.46

S.R. 110

100

℄ R/W & CONST. S.R. 110

INDUSTRIAL DR.
CURVE DATA
P.I.STA. 36+63.17
Δ = 22° 55′ 17″ (RT)
Dc = 7° 23′ 35″
R = 775.00′
T = 157.12′
L = 310.04′
E = 15.77′
emax = NC

PC STA. 31+42.43

PRC STA. 105+03.34

℄ R/W S.R. 110

PCC STA. 106+61.63

PRC STA. 35+06.04

PRC STA. 108+61.10

℄ R/W & CONST. INDUSTRIAL DR.

40

N 42° 27′ 08″ W 45

50

35

INDUSTRIAL DR.

PT Sta. 38+16.09

STA. 32+01.52 ℄ R/W & CONST. INDUSTRIAL DR.=
STA. 106+42.53 ℄ CONST S.R. 110

PC STA. 31+42.43 ℄ R/W & CONST. INDUSTRIAL DR.=
STA. 106+40.00 ℄ EX. S.R. 110

℄ CONST. 110

INDUSTRIAL DR.
CURVE DATA
P.I.STA. 33+37.88
Δ = 52° 05′ 04″ (LT)
Dc = 14° 19′ 26″
R = 400.00′
T = 195.46′
L = 363.62′
E = 45.20′
emax = NC

GO20069

BEGIN PROJECT
PT STA. 31+42.43

END WORK
STA. 113+44.83

PT STA. 113+44.83 BK=
STA. 113+34.33 AHD

CULTIVATED

CULTIVATED

HARRISON TOWNSHIP

CITY OF NAPOLEON

MAUMEE RIVER

LIBERTY TOWNSHIP

℄ R/W & CONST. RIVERVIEW AVE.

N 48° 55′ 07″ E

Ex R/W

Ex R/W

INDUSTRIAL DR.
CURVE DATA
P.I.Sta. 52+17.04
Δ = 43° 25′ 15″ (RT)
Dc = 16° 22′ 13″
R = 350.00′
T = 139.36′
L = 265.24′
E = 26.72′
emax = NC

590

BEGIN WORK
STA. 589+31.35

PC STA. 590+46.19

END PROJECT
STA. 53+53.69

GO20069

STA. 50+59.41 ℄ R/W & CONST. INDUSTRIAL DR.=
STA. 593+78.62 ℄ R/W & CONST. RIVERVIEW AVE.

CORPORATION LIMIT
STA. 43+11.18

STRUCTURE NO
HEN-XXX-XXXX

RESIDENTIAL

RAILROAD
STA. 53+63.19

PC STA. 50+77.68

PT STA. 53+42.92 BK=
STA. 53+42.92 AHD

END WORK
STA. 598+61.61

RIVERVIEW AVE.

RESIDENTIAL

MICHIGAN SOUTHERN
RAILROAD

RIVERVIEW AVE.
EX. CURVE DATA
P.I.STA. 596+98.18
Δ = 12° 59′ 05″ (RT)
Dc = 1° 00′ 00″
R = 5,729.16′
T = 651.98′
L = 1,298.38′
E = 36.98′
emax=0.025

600

PT Sta. 603+44.57

DESIGN DESIGNATION

	INDUSTRIAL DRIVE	RIVERVIEW AVENUE	S.R. 110
CURRENT ADT (2015)	7390	3230	5740
DESIGN YEAR ADT (2035)	8010	3510	6230
DESIGN HOURLY VOLUME (2035)	910	380	700
DIRECTIONAL DISTRIBUTION	55%	50%	50%
TRUCKS (24 HOUR B&C)	9%	12%	6%
T_D	5%	7%	14%
DESIGN SPEED	40	55	60
LEGAL SPEED	35	50	55
DESIGN FUNCTIONAL CLASSIFICATION:	URBAN COLLECTOR	URBAN MINOR ARTERIAL	URBAN MINOR ARTERIAL

HORIZONTAL SCALE IN FEET
0 50 100 200

SCHEMATIC PLAN

HEN-NEW MAUMEE RIVER BRIDGE

W:\Projects\Projects F-J\H2530002\22984\roadway\sheets\22984GB001.dgn 9/10/2014 5:17:58 PM SValentin

PRIMARY PROJECT CONTROL INFORMATION				
POINT NO.	NORTHING	EASTING	ELEVATION	DESCRIPTION
ARP1	638573.6970	1528220.3138	678.11	IPINS /CIR
ARP2	638206.8882	1528219.4996	678.39	IPINS /CIR
ARP3	638499.0526	1529338.0111	674.81	IPINS /CIR
ARP4	637071.1187	1527468.4342	671.16	IPINS /CIR
ARP5	636091.1981	1528575.4343	667.46	IPINS /CIR
ARP6	635754.7549	1528038.3710	671.21	IPINS /CIR
JAS500	637266.4642	1527666.6053	670.59	MAG SPIKE
JEW1	636329.8015	1529263.7085	667.21	IPINS /CIR
JEW2	636549.8196	1530198.8952	665.77	IPINS /CIR
JEW3	636112.8419	1530882.4102	671.58	IPINS /CIR
JEW4	637659.8855	1528148.4581	678.13	IPINS /CIR
JEW5	637834.1903	1528370.4531	677.75	IPINS /CIR
JEW6	637483.2673	1528308.0899	657.38	IPINS /CIR
JEW7	637594.2634	1528367.7320	658.49	IPINS /CIR
JEW8	637725.4669	1528460.3426	660.03	MAG
JEW9	637889.5540	1528167.4761	678.45	IPINS /CAP
JEW10	637533.8146	1528056.8241	676.36	IPIN -CAP
JEW11	637404.8315	1527907.9181	675.19	IPIN -CAP
JEW12	637242.5817	1527729.1355	673.40	IPIN -CAP
JJL1	638118.1772	1528248.0499	678.06	IPINS /CIR
JJL2	637886.5906	1528504.3997	675.99	IPINS
JJL3	638056.5414	1528759.0865	674.94	IPINS
JJL4	638204.6910	1529006.4512	673.59	IPINS
JJL5	638131.5868	1528882.9361	674.10	MAGS
MSGBASE1	637271.9148	1526923.5899	678.73	IPINS /CIR

VERTICAL CONTROL INFORMATION			
POINT NO.	ELEVATION	DESCRIPTION	
BM18	680.83	CMON /BRASS DISC	STA. 65+94.80-134.94' LT CL INDUSTRIAL DR.
BM38	672.71	CMON /BRASS DISC	STA. 55+02.58-19.45' RT CL SR110
BM82	677.06	CMON /BRASS DISC	STA. 578+65.55-540.18' LT CL RIVERVIEW

CALCULATED

CHECKED

BENCHMARKS AND HORIZONTAL CONTROL

HEN-NEW MAUMEE RIVER BRIDGE

W:\Projects\Projects F-J\H2530002\22984\roadway\sheets\22984GB002.dgn 9/10/2014 5:17:59 PM SVdentin

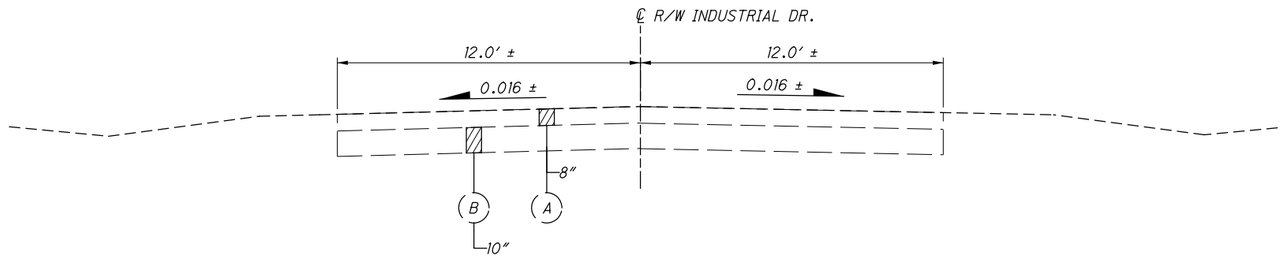

EXISTING SECTION - INDUSTRIAL DR.

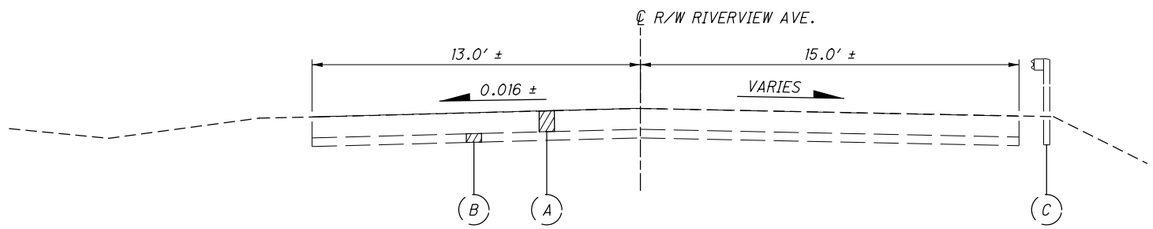

EXISTING SECTION - RIVERVIEW AVE.

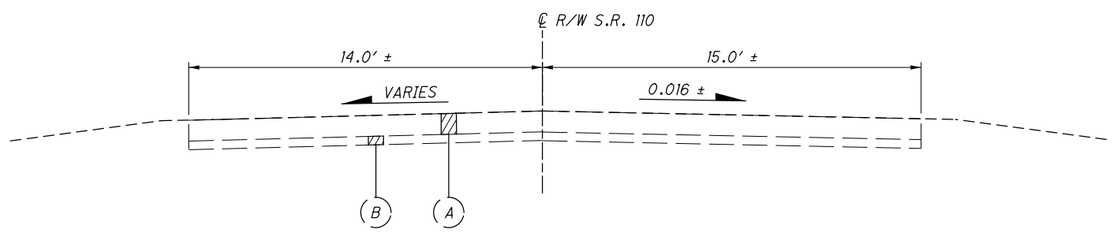

EXISTING SECTION - S.R. 110

LEGEND

1. ITEM 446 - 1¼″ ASPHALT CONCRETE SURFACE COURSE, TYPE 1, PG64-22
2. ITEM 446 - 1¾″ ASPHALT CONCRETE INTERMEDIATE COURSE, TYPE 2, PG64-22
3. ITEM 301 - 6″ ASPHALT CONCRETE BASE, PG64-22
4. ITEM 304 - 6″ AGGREGATE BASE
5. ITEM 407 - TACK COAT FOR INTERMEDIATE COURSE (0.04 GAL/SY)
6. ITEM 407 - TACK COAT (0.075 GAL/SY)
7. ITEM 203 - SUBGRADE COMPACTION
8. ITEM 605 - 6″ SHALLOW PIPE UNDERDRAIN WITH FABRIC WRAP
9. ITEM 609 - COMBINATION CURB AND GUTTER, TYPE 2
10. ITEM 609 - COMBINATION CURB AND GUTTER, TYPE 3, AS PER PLAN
11. ITEM 609 - CURB, TYPE 2-A
12. ITEM 609 - CURB, TYPE 6
13. ITEM 452 - NON-REINFORCED CONCRETE PAVEMENT, MISC.: DECORATIVE, 8″ THICK (TRUCK APRON)
14. ITEM 608 WALKWAY MISC.: DECORATIVE CONCRETE, 6″ THICK (SPLITTER ISLAND)
15. ITEM 608 - 4″ CONCRETE WALK
16. ITEM 659 - SEEDING AND MULCHING
17. ITEM 526 - REINFORCED CONCRETE APPROACH SLAB. (T=17″), AS PER PLAN
18. ITEM 606 - GUARDRAIL, TYPE MGS WITH LONG POSTS
19. ITEM 204 - EXCAVATION OF SUBGRADE

ITEM 204 - GRANULAR MATERIAL, TYPE C

ITME 204 - GEOTEXTILE FABRIC, TYPE D

(A) 10″ ASPHALT (UNLESS OTHERWISE SHOWN)

(B) 4″ AGGREGATE BASE (UNLESS OTHERWISE SHOWN)

(C) GUARDRAIL

TYPICAL SECTIONS - EXISTING ROAD

HEN-NEW MAUMEE RIVER BRIDGE

W:\Projects\Projects F-JNH2530002\22984\roadway\sheets\22984GY001.dgn 9/10/2014 5:18:05 PM SValentin

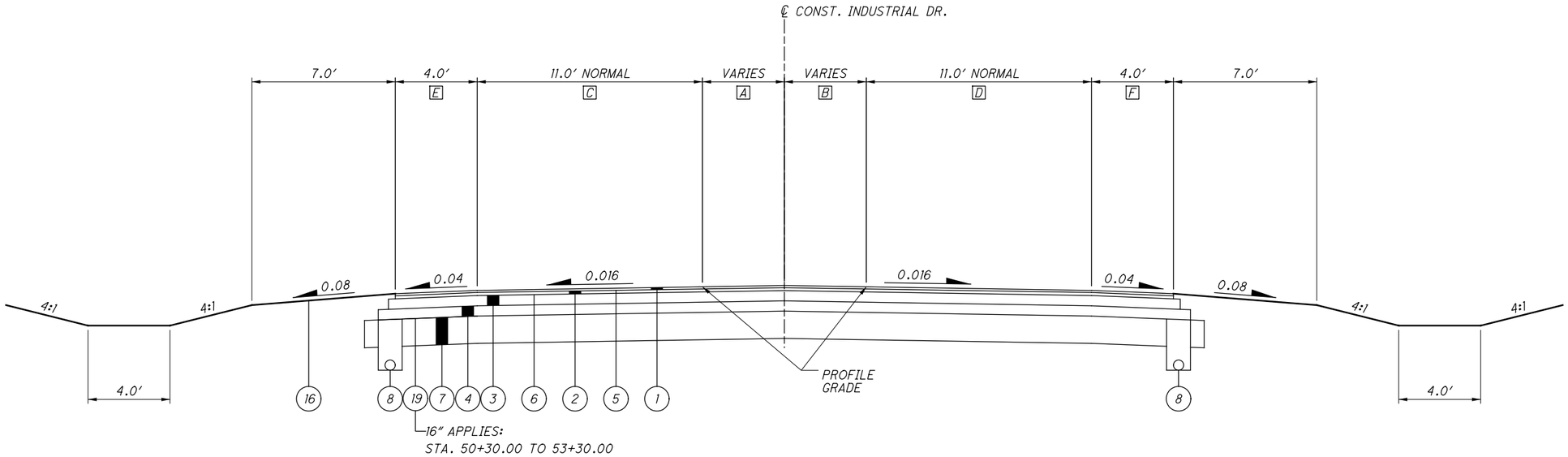

NORMAL SECTION - INDUSTRIAL DR.

A VARIES: 4.4′ TO 0.0′ STA. 33+63.77 TO STA. 35+06.02
0.0′ FROM STA. 35+06.02 TO STA. 39+06.32
VARIES: 2.3′ TO 8.1′ STA. 49+08.32 TO STA. 49+27.64
0.0′ FROM STA. 52+14.97 TO STA. 53+53.69

B VARIES: 5.0′ TO 0.0′ STA. 33+63.77 TO STA. 35+06.02
0.0′ FROM STA. 35+06.02 TO STA. 39+06.32
VARIES: 1.7′ TO 0.0′ STA. 49+08.32 TO STA. 49+27.64
VARIES: 8.9′ TO 0.0′ STA. 52+14.97 TO STA. 53+53.69

C 12.0′ FROM STA. 33+63.77 TO STA. 34+78.88
VARIES: 12.0′ AT STA. 34+78.88 TO 11.0′ AT STA. 35+06.02
VARIES: 12.2′ AT STA. 49+08.32 TO 13.1′ STA. 49+27.64
VARIES: 12.0′ FROM STA. 52+14.97 TO STA. 53+53.69

D VARIES: 17.4′ AT STA. 52+14.97 TO 12.0′ AT STA. 53+53.69
VARIES: 11.0′ AT STA. 35+06.05 TO 15.7′ AT STA. 36+78.50
VARIES: 15.7′ AT STA. 36+78.50 TO 11.0′ AT STA. 38+16.09

E CURB AND GUTTER APPLIES FROM STA. 49+08.32 TO 49+27.64
VARIES: 4.0′ AT STA. 53+23.59 TO 0.0′ AT STA. 53+42.92

F CURB AND GUTTER APPLIES FROM STA. 49+08.32 TO 49+27.64
VARIES: 4.0′ AT STA. 52+25.48 TO 0.0′ AT STA. 53+64.45

APPLIES:
STA. 33+63.77 TO STA. 39+06.32
STA. 49+08.32 TO STA. 49+27.64
STA. 52+14.97 TO STA. 53+53.69

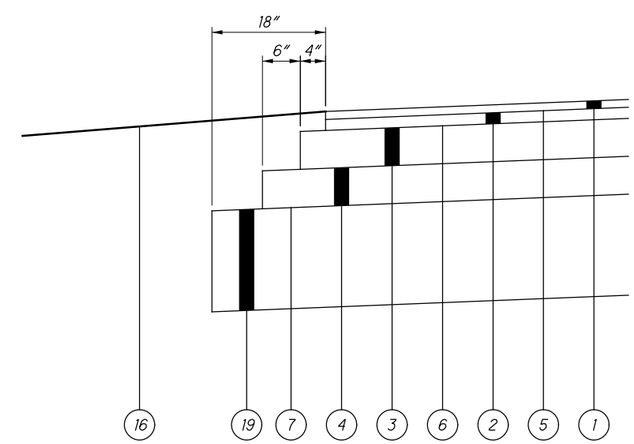

SHOULDER DETAIL

TYPICAL SECTIONS - INDUSTRIAL DR.

HEN-NEW RIVER MAUMEE BRIDGE

W:\Projects\Projects F-J\H2530002\22984\roadway\sheets\22984GY002.dgn 9/10/2014 5:18:05 PM SVdentin

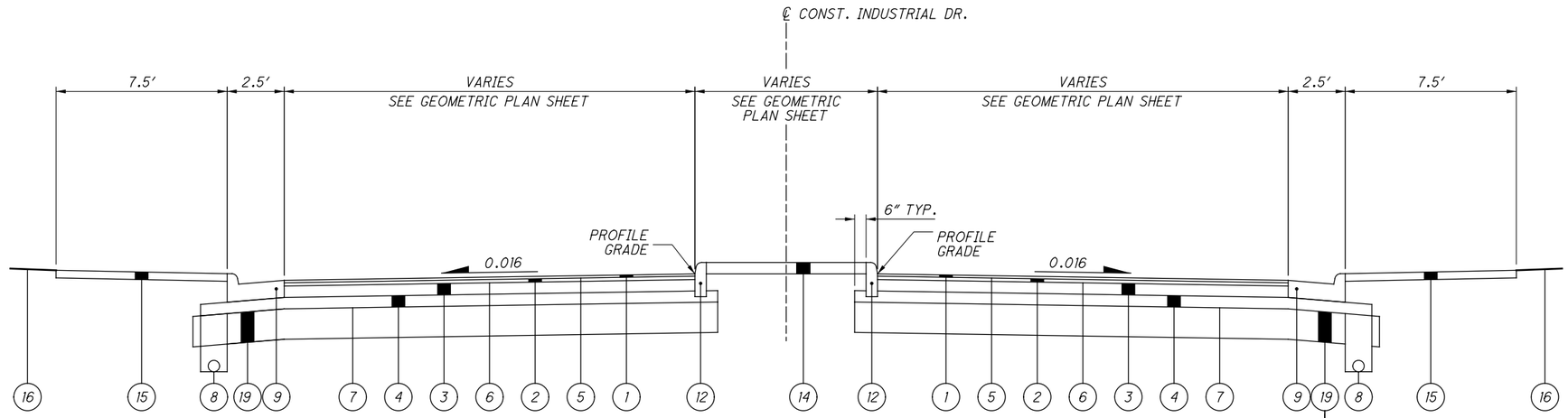

16″ APPLIES INDUSTRIAL DR. :
STA. 50+30.00 TO 53+30.00
12″ APPLIES RIVERVIEW AVE. :
STA. 592+96 TO STA. 596+06
15″ APPLIES S.R. 110 :
STA. 102+05 TO 108+38

NORMAL SECTION - SPLITTER ISLANDS

APPLIES ON INDUSTRIAL DR.:
STA. 32+64.11 TO STA. 33+63.77
STA. 49+27.64 TO STA. 49+79.62
STA. 51+12.67 TO STA. 52+14.97

APPLIES ON RIVERVIEW AVE.:
STA. 591+11.11 TO STA. 593+11.11
STA. 594+43.70 TO STA. 596+42.56

APPLIES ON S.R. 110:
STA. 103+78.89 TO STA. 105+78.67
STA. 107+12.59 TO STA. 110+94.51

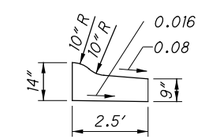

DETAIL B
COMBINATION CURB AND GUTTER,
TYPE 3, AS PER PLAN

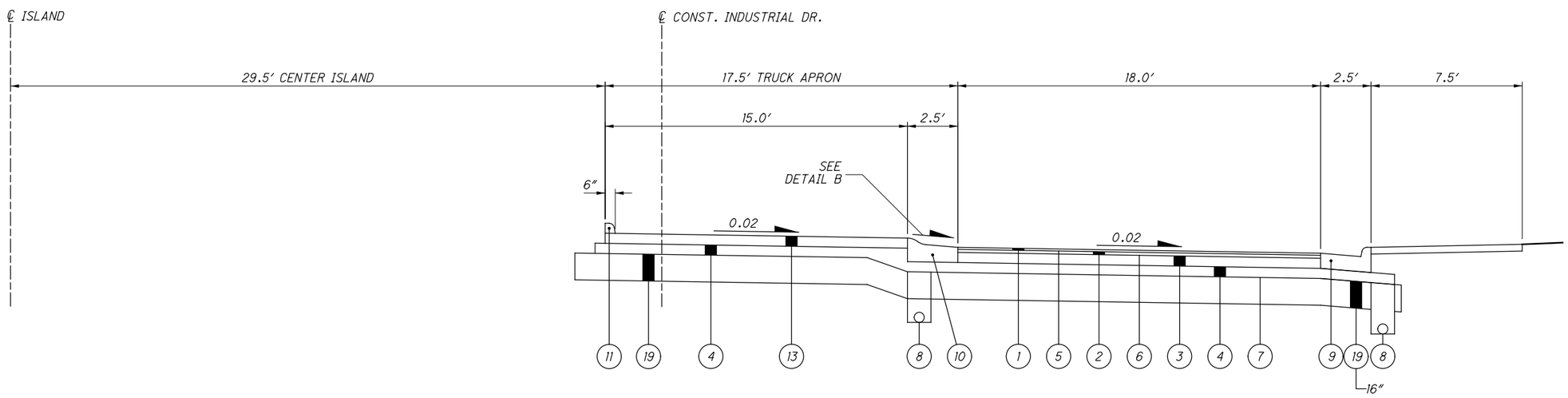

NORMAL SECTION - ROUNDABOUT

FOR LEGEND, SEE SHEET **

TYPICAL SECTIONS - INDUSTRIAL DR.

HEN-NEW MAUMEE RIVER BRIDGE

W:\Projects\Projects F-J\H2530002\22984\roadway\sheets\22984GY003.dgn 9/10/2014 5:18:06 PM SVdentin

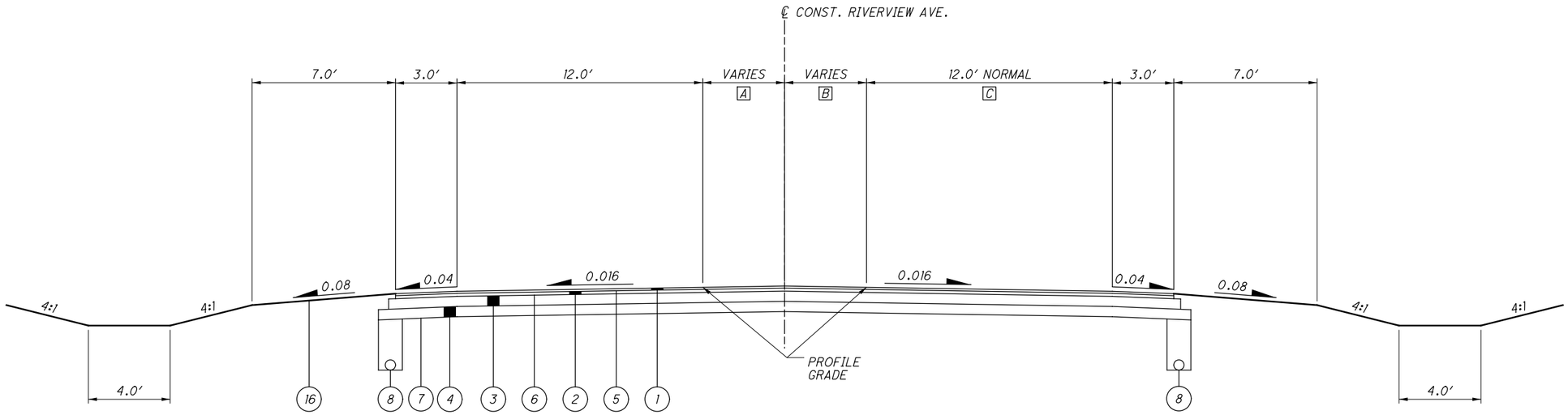

NORMAL SECTION - RIVERVIEW AVE.

A VARIES: 0.0′ TO 2.9′ STA. 589+31.35 TO STA. 591+11.11
VARIES: 7.3′ TO 0.0′ STA. 596+42.56 TO STA. 598+61.61
B VARIES: 0.0′ TO 5.0′ STA. 589+31.35 TO STA. 591+11.11
VARIES: 4.0′ TO 0.0′ STA. 596+42.56 TO STA. 598+61.61
B VARIES: 12.3′ AT 596+42.56 TO 12.0′ AT STA. 596+63.21

APPLIES:
STA. 589+31.35 TO STA. 591+11.11
STA. 596+42.56 TO STA. 598+61.61

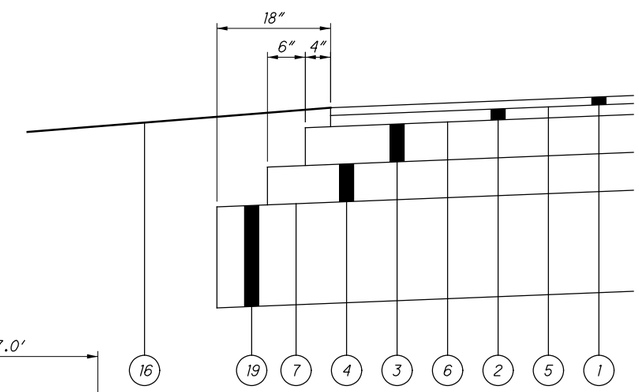

SHOULDER DETAIL

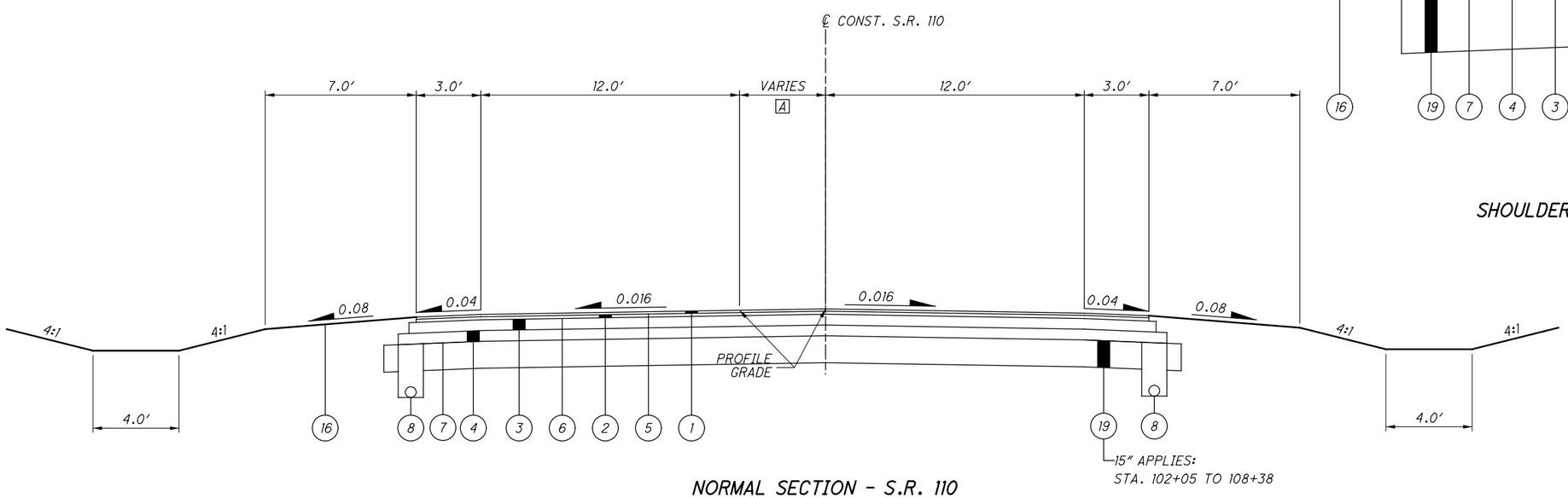

NORMAL SECTION - S.R. 110

A VARIES: 0.0′ TO 8.0′ STA. 101+50.00 TO STA. 103+78.89
VARIES: 7.9′ TO 0.0′ STA. 110+94.51 TO STA. 113+44.83

APPLIES:
STA. 101+50.00 TO STA. 103+78.89
STA. 110+94.51 TO STA. 113+44.83

FOR LEGEND, SEE SHEET **

TYPICAL SECTIONS - RIVERVIEW AVE. & S.R. 110

HEN-NEW MAUMEE RIVER BRIDGE

W:\Projects\Projects F-J\H2530002\22984\roadway\sheets\22984GY004.dgn 9/10/2014 5:18:06 PM SVdentin

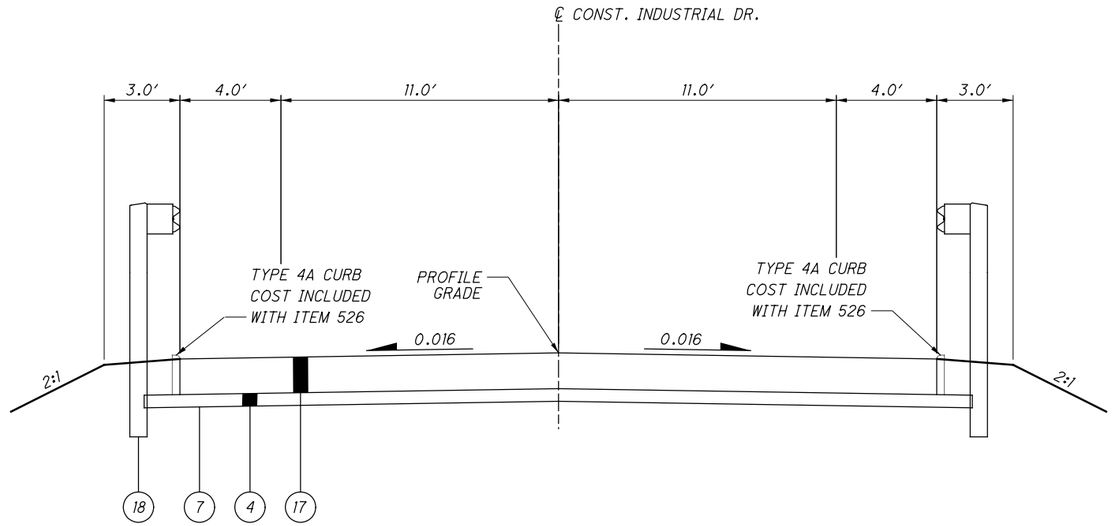

NORMAL SECTION - APPROACH SLAB

APPLIES:
STA. 39+06.32 TO STA. 39+31.32

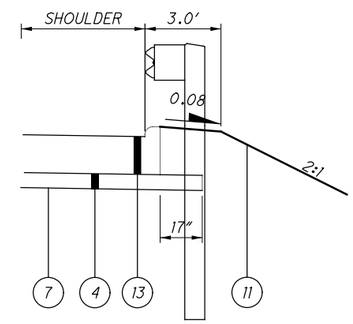

SHOULDER DETAIL

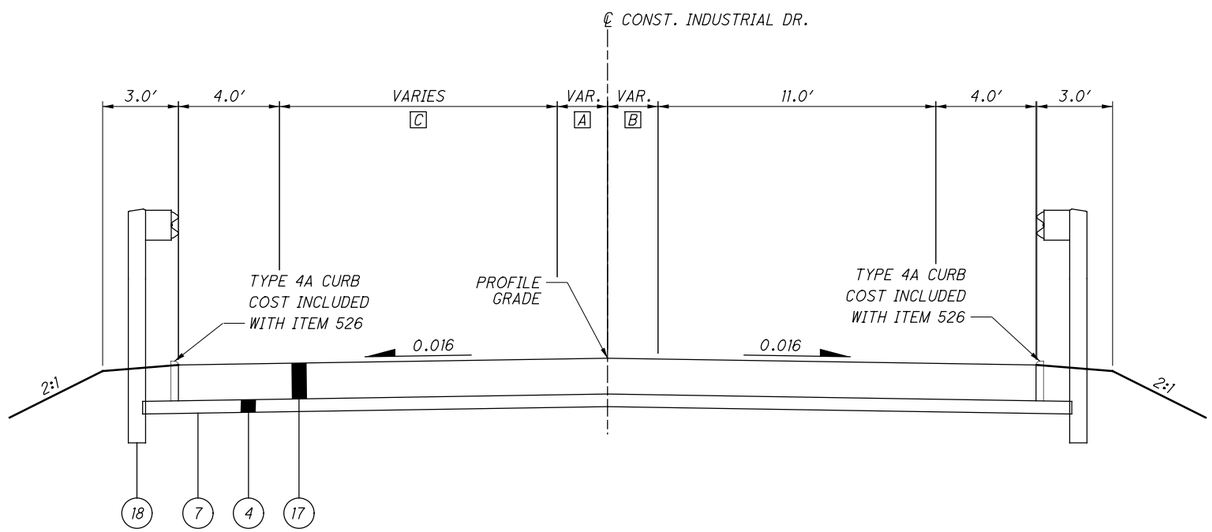

NORMAL SECTION - APPROACH SLAB

APPLIES:
STA. 48+76.82 TO STA. 49+08.32

A VARIES: 2.3′ TO 5.0′ STA. 48+76.82 TO STA. 49+08.32
B VARIES: 2.1′ TO 1.7′ STA. 48+76.82 TO STA. 49+08.32
C VARIES: 11.0′ TO 12.1′ STA. 48+76.82 TO STA. 49+08.32

TYPICAL SECTIONS - APPROACH SLAB

HEN-NEW MAUMEE RIVER BRIDGE

W:\Projects\Projects F-J\H2530002\22984\roadway\sheets\22984GY005.dgn 9/10/2014 5:18:07 PM SVdentin

ROUNDING

THE ROUNDING AT SLOPE BREAKPOINTS SHOWN ON THE TYPICAL SECTIONS APPLIES TO ALL CROSS-SECTIONS EVEN THOUGH OTHERWISE SHOWN.

UTILITIES

THE LOCATION OF THE UNDERGROUND UTILITIES SHOWN ON THE PLANS ARE AS OBTAINED FROM THE OWNERS AS REQUIRED BY SECTION 153.64 O.R.C.

UTILITY OWNERSHIP

LISTED BELOW ARE ALL UTILITIES LOCATED WITHIN THE PROJECT CONSTRUCTION LIMITS TOGETHER WITH THEIR RESPECTIVE OWNERS:

TIME WARNER CABLE

CITY OF NAPOLEON
255 WEST RIVERVIEW
NAPOLEON, OH 43545
(419) 592-4010

OHIO GAS
335 E. LEGGETT STREET
WASEON, OH 43567
(419) 825-5368

TOLEDO EDISON
300 MADISON AVENUE
TOLEDO, OH 43652
(419)249-5218

CENTURY LINK
812 DOLAN ST.
DEFIANCE, OH 43512

SURVEYING PARAMETERS

PRIMARY PROJECT CONTROL MONUMENTS GOVERN ALL POSITIONING ON ODOT PROJECTS. SEE SHEET ___ OF THE PLANS FOR A TABLE CONTAINING PROJECT CONTROL INFORMATION.

USE THE FOLLOWING PROJECT CONTROL, VERTICAL POSITIONING, AND HORIZONTAL POSITIONING PARAMETERS FOR ALL SURVEYING:

PROJECT CONTROL

POSITIONING METHOD: ODOT VRS
MONUMENT TYPE: CORS STATIONS

VERTICAL POSITIONING

ORTHOMETRIC HEIGHT DATUM: NAVD 88
GEOID: GEOID9

HORIZONTAL POSITIONING

REFERENCE FRAME: NAD83 (CORS96)
ELLIPSOID: GRS 80
MAP PROJECTION: LAMBERT CONFORMAL CONIC
COORDINATE SYSTEM: OHIO STATE PLANE - NORTH ZONE
COMBINED SCALE FACTOR: 1.0000675074
ORIGIN OF COORDINATE
SYSTEM: 0.00, 0.00

SURVEYING PARAMETERS (CONT.)

USE THE POSITIONING METHODS AND MONUMENT TYPE USED IN THE ORIGINAL SURVEY TO RESTORE ALL MONUMENTS RELATED TO PRIMARY PROJECT CONTROL THAT ARE DAMAGED OR DESTROYED BY CONSTRUCTION ACTIVITIES. RESTORE THE DAMAGED OR DESTROYED MONUMENTS IN ACCORDANCE WITH SUPPLEMENTAL SPECIFICATION 823.

UNITS ARE IN U.S. SURVEY FEET. USE THE FOLLOWING CONVERSION FACTOR: 1 METER = 3.280833333 U.S. SURVEY FEET.

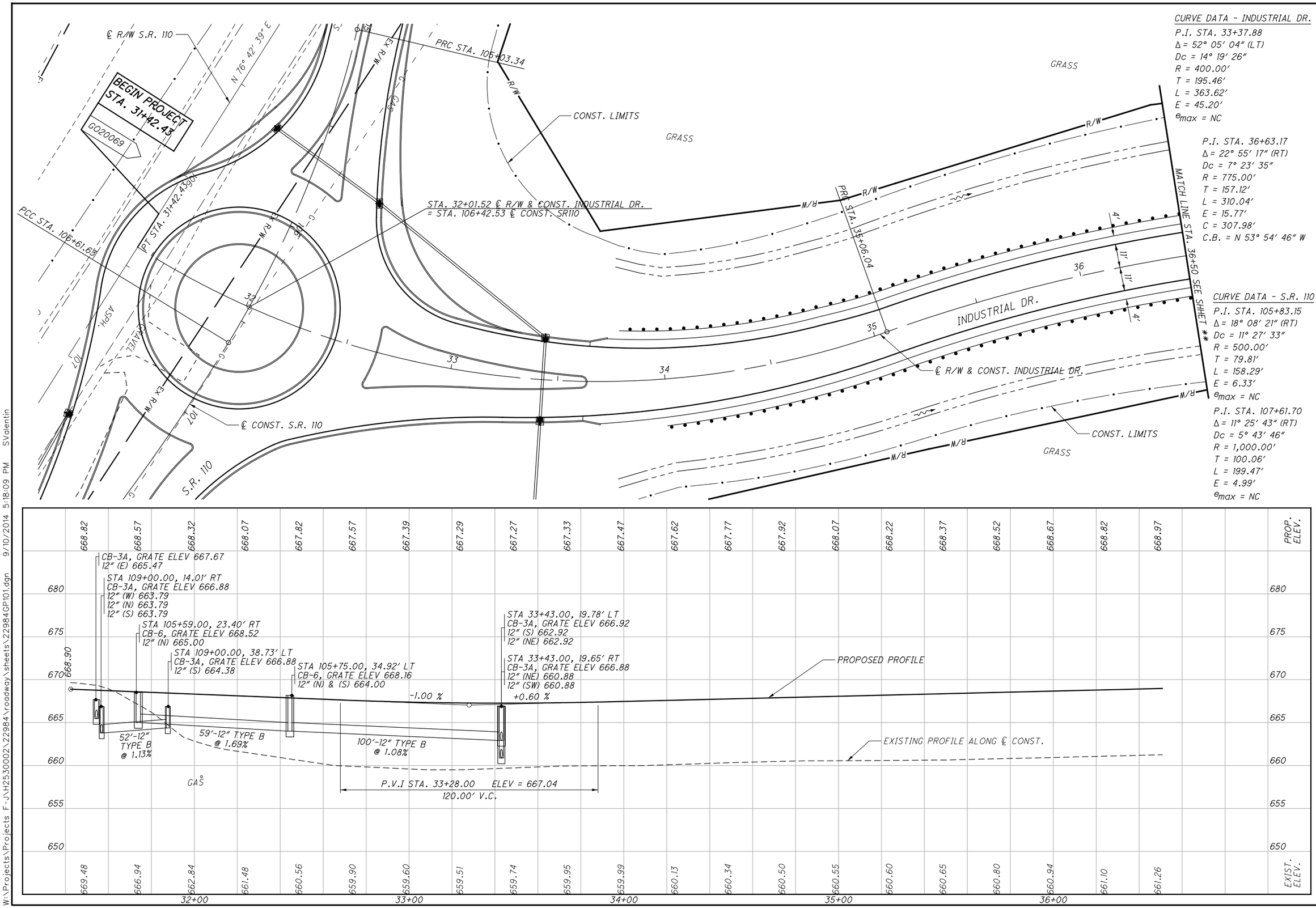

HORIZONTAL SCALE IN FEET 0 10 20 40

CALCULATED

CHECKED

PLAN AND PROFILE - INDUSTRIAL DR, STA. 31+42.43 TO STA. 36+50.00

HEN-NEW MAUMEE RIVER BRIDGE

W:\Projects\Projects F-J\H2530002\22984\roadway\sheets\22984GP101.dgn 9/10/2014 5:18:09 PM SValentin

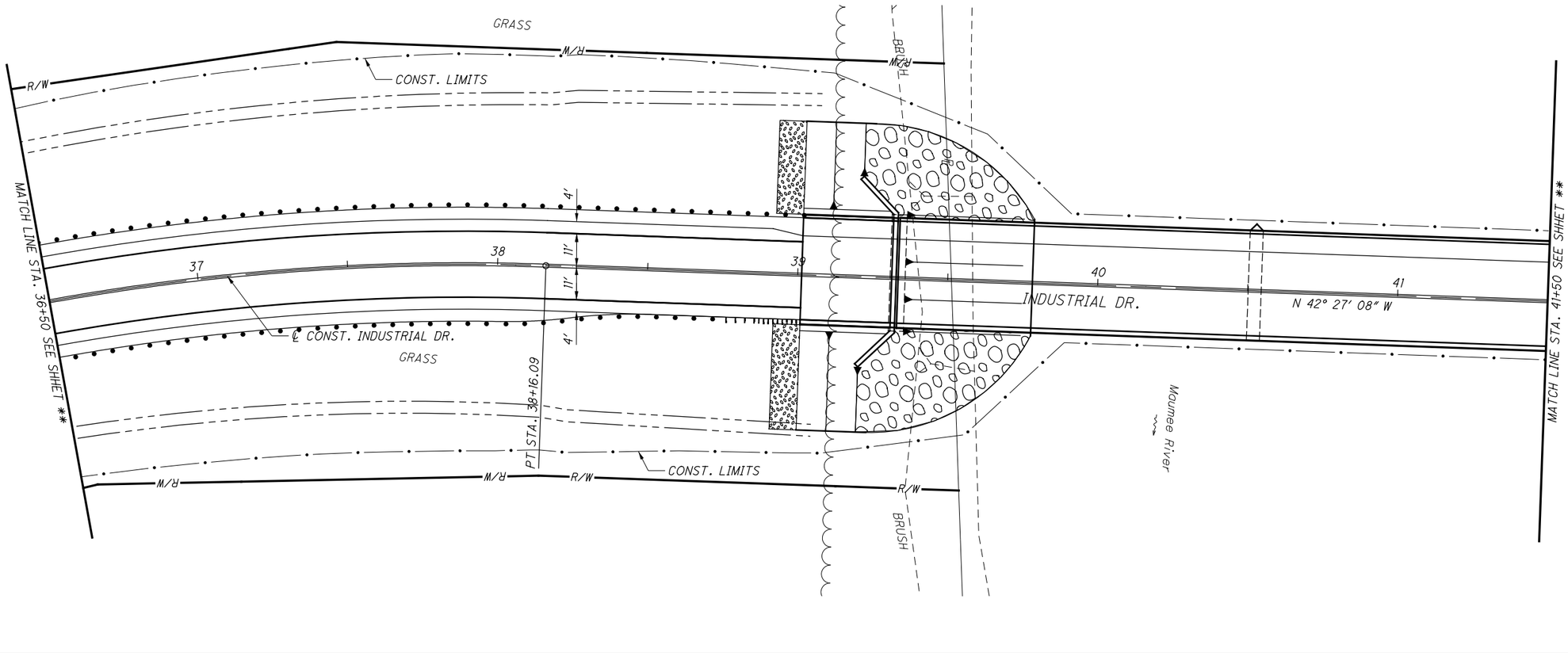

CURVE DATA - INDUSTRIAL DR.

P.I. STA. 36+63.17
Δ = 22° 55′ 17″ (RT)
Dc = 7° 23′ 35″
R = 775.00′
T = 157.12′
L = 310.04′
E = 15.77′
C = 307.98′
C.B. = N 53° 54′ 46″ W

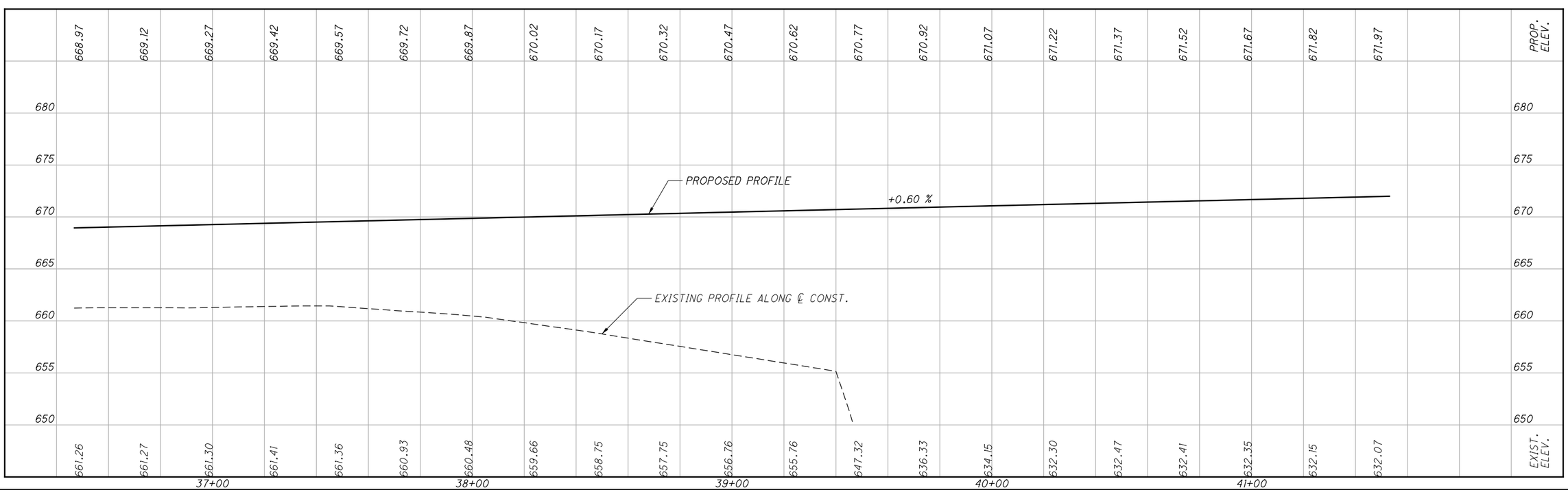

HORIZONTAL SCALE IN FEET
0 10 20 40

CALCULATED
CHECKED

PLAN AND PROFILE - INDUSTRIAL DR.
STA. 36+50.00 TO STA. 41+50.00

HEN-NEW MAUMEE RIVER BRIDGE

W:\Projects\Projects F-JNH2530002\22984\roadway\sheets\22984GP102.dgn 9/10/2014 5:18:10 PM SValentin

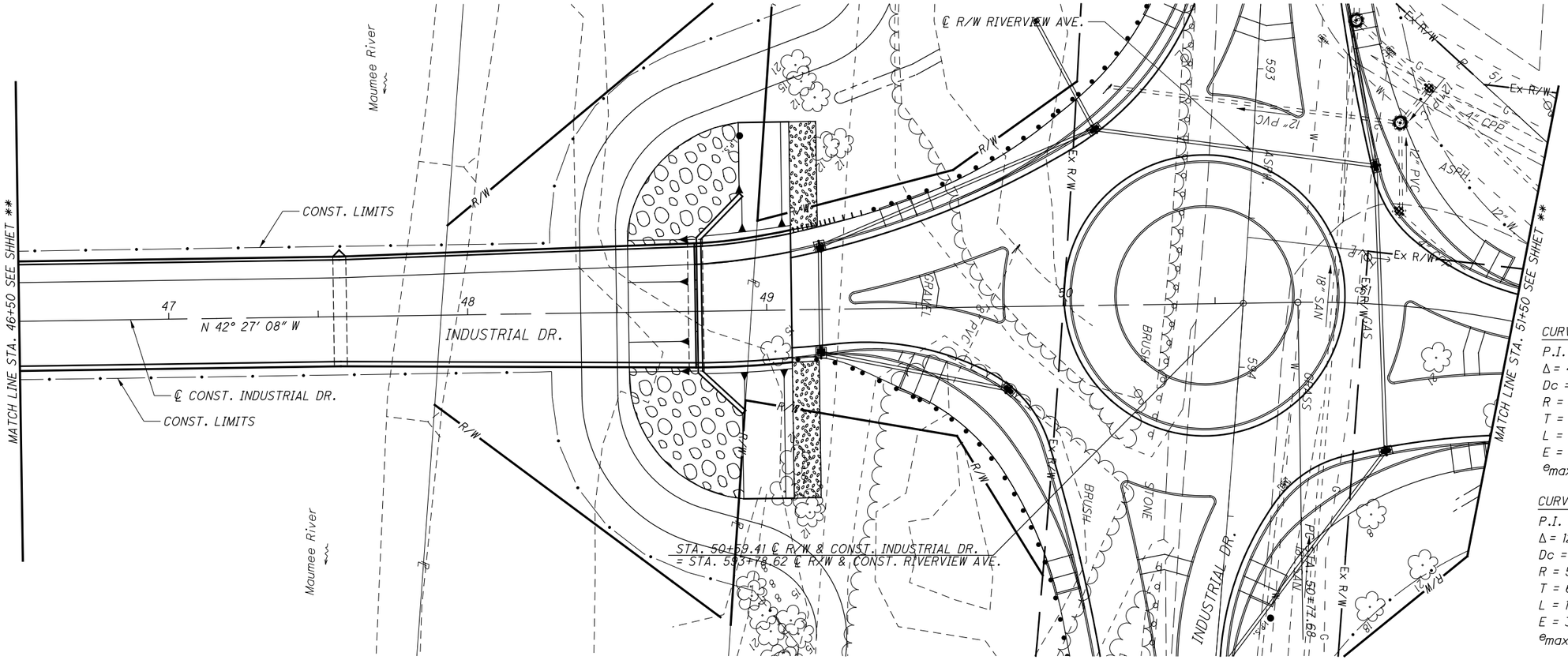

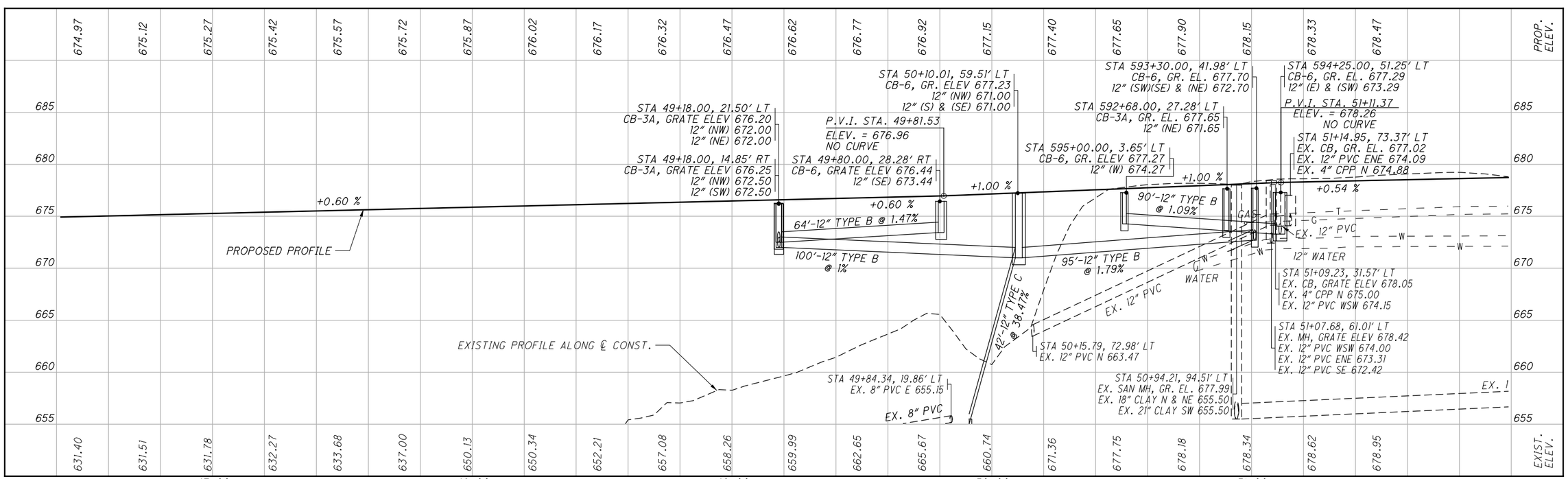

HORIZONTAL SCALE IN FEET
0 10 20 40

CALCULATED
CHECKED

PLAN AND PROFILE - INDUSTRIAL DR.
STA. 46+50.00 TO STA. 51+50.00

HEN-NEW MAUMEE RIVER BRIDGE

W:\Projects\Projects F-J\H2530002\22984\roadway\sheets\22984GP104.dgn 9/10/2014 5:18:10 PM SValentin

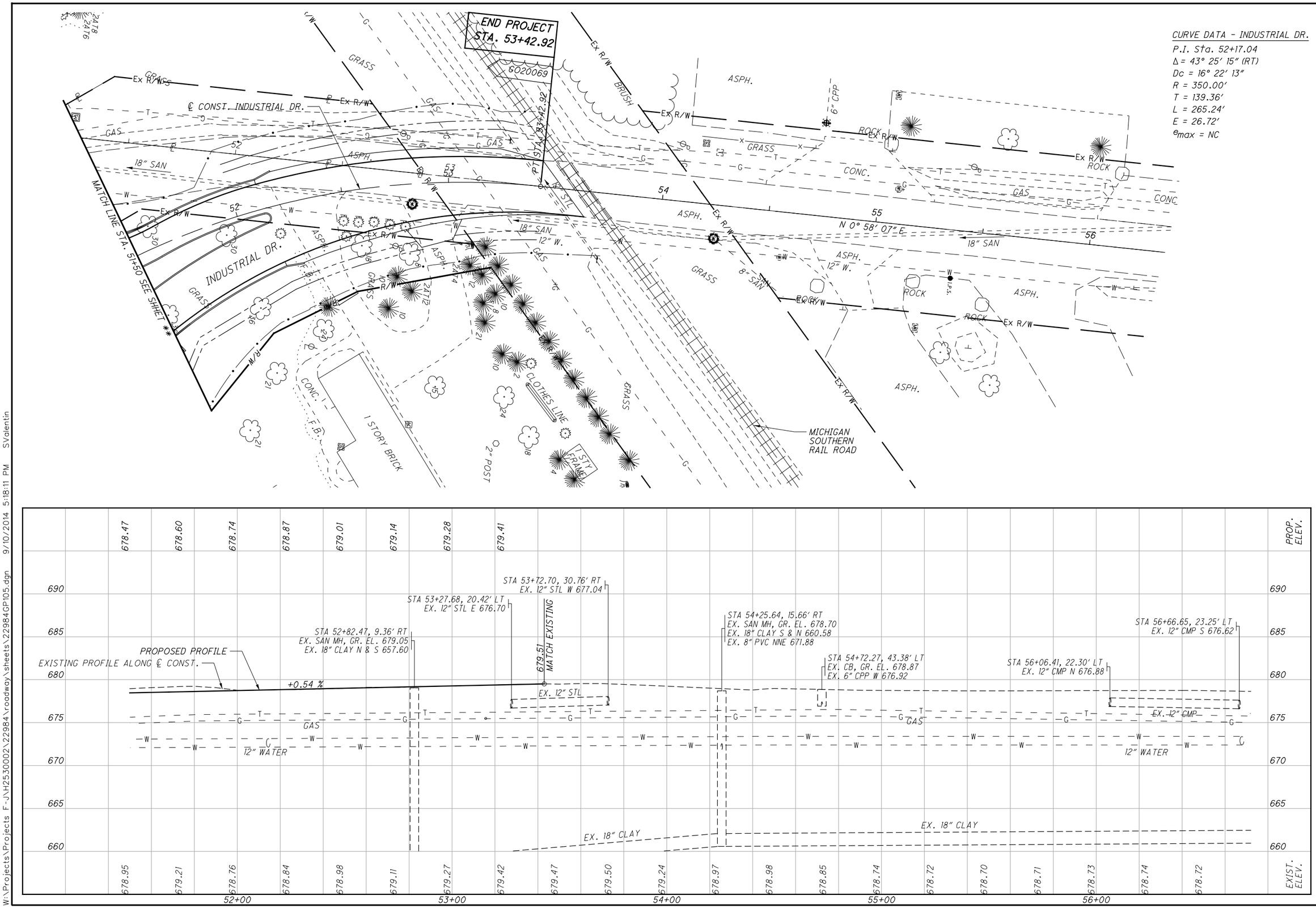

PLAN AND PROFILE - INDUSTRIAL DR.
STA. 51+50.00 TO STA. 56+50.00

HEN-NEW MAUMEE RIVER BRIDGE

CALCULATED
CHECKED

W:\Projects\Projects F-J\H2530002\22984\roadway\sheets\22984GP105.dgn 9/10/2014 5:18:11 PM SValentin

CURVE DATA - RIVERVIEW AVE.
P.I. Sta. 596+98.18
Δ = 12° 59′ 05″ (RT)
Dc = 1° 00′ 00″
R = 5,729.16′
T = 651.98′
L = 1,298.38′
E = 36.98′
e_{max} = NC

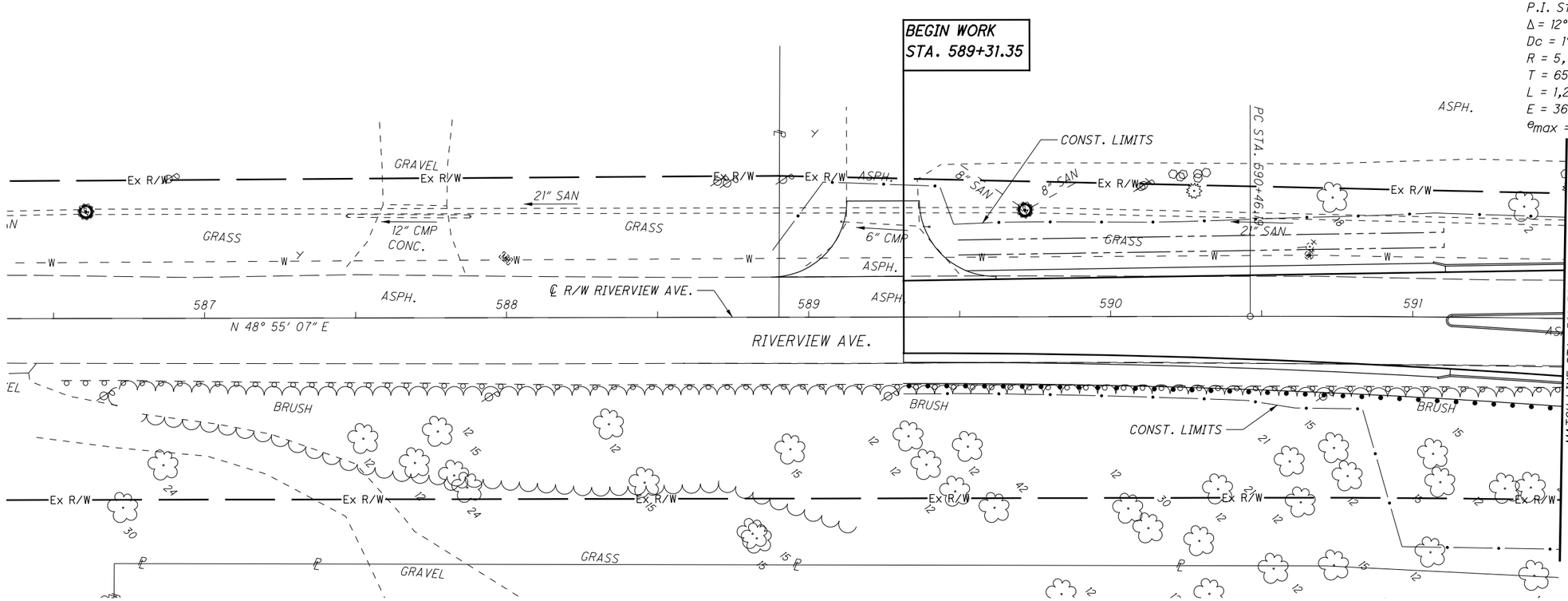

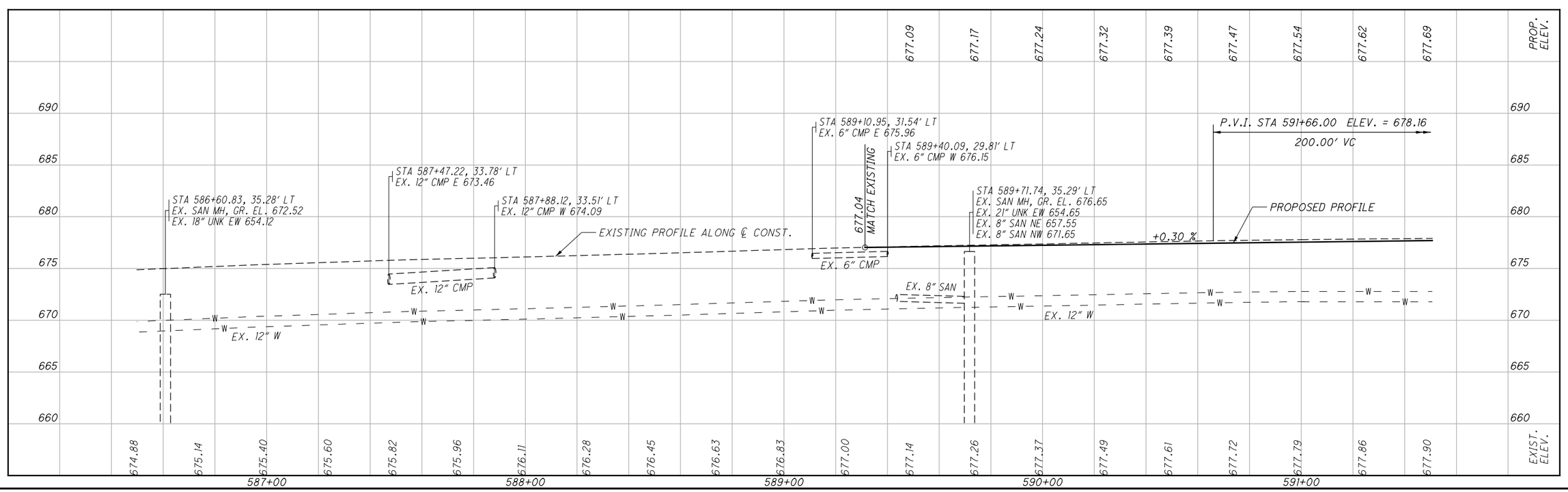

HORIZONTAL SCALE IN FEET
0 10 20 40

CALCULATED
CHECKED

PLAN AND PROFILE - RIVERVIEW AVE.
STA. 586+50.00 TO STA. 591+50.00

HEN-NEW MAUMEE RIVER BRIDGE

W:\Projects\Projects F-J\H2530002\22984\roadway\sheets\22984GP201.dgn 9/10/2014 5:18:12 PM SValentin

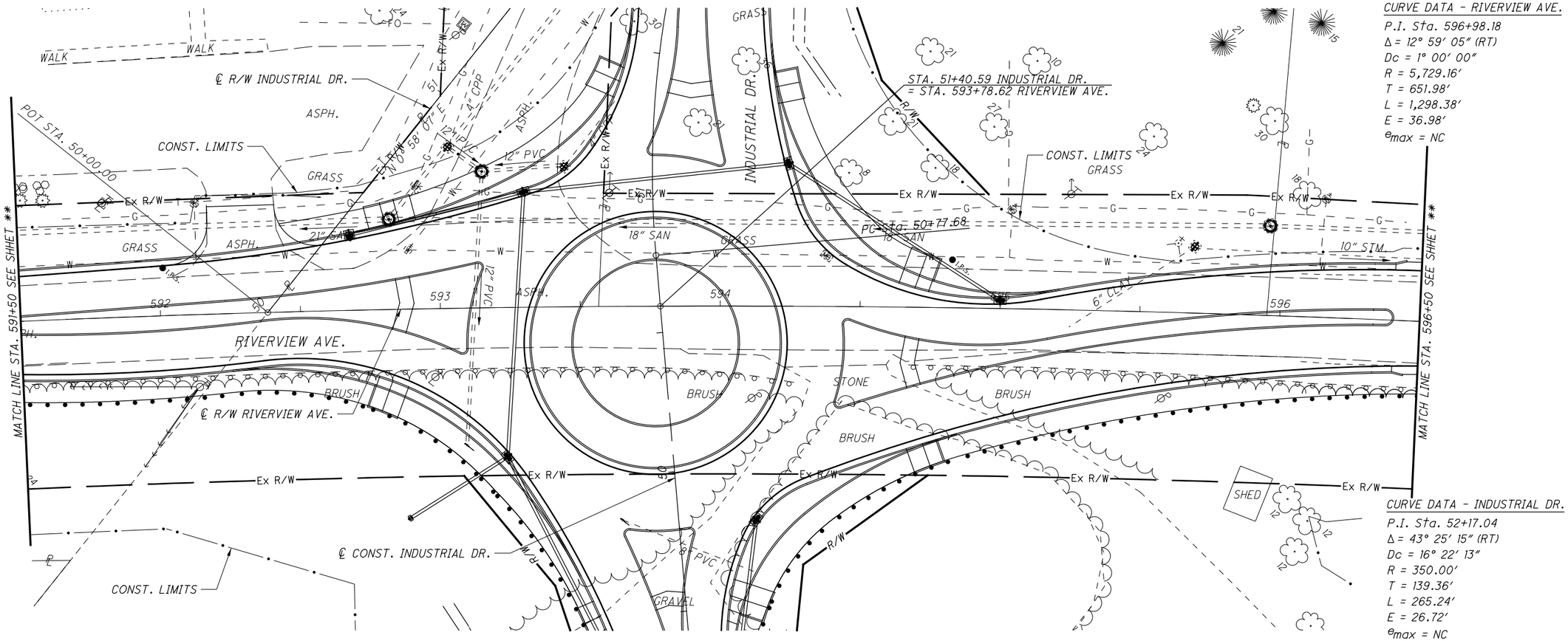

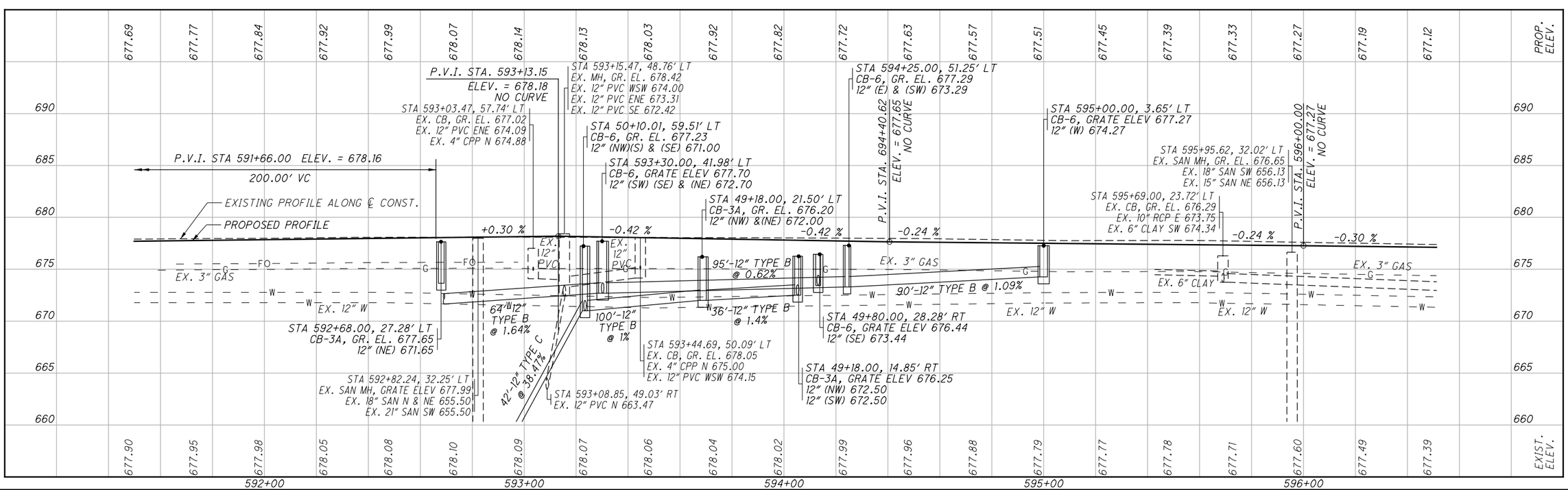

HORIZONTAL SCALE IN FEET
0 10 20 40

CALCULATED
CHECKED

PLAN AND PROFILE - RIVERVIEW AVE.
STA. 591+50.00 TO STA. 596+50.00

HEN-NEW MAUMEE RIVER BRIDGE

W:\Projects\Projects F-JNH2530002\22984\roadway\sheets\22984GP202.dgn 9/10/2014 5:18:12 PM SValentin

CURVE DATA - RIVERVIEW AVE.
P.I. Sta. 596+98.18
Δ = 12° 59′ 05″ (RT)
Dc = 1° 00′ 00″
R = 5,729.16′
T = 651.98′
L = 1,298.38′
E = 36.98′
e_{max} = NC

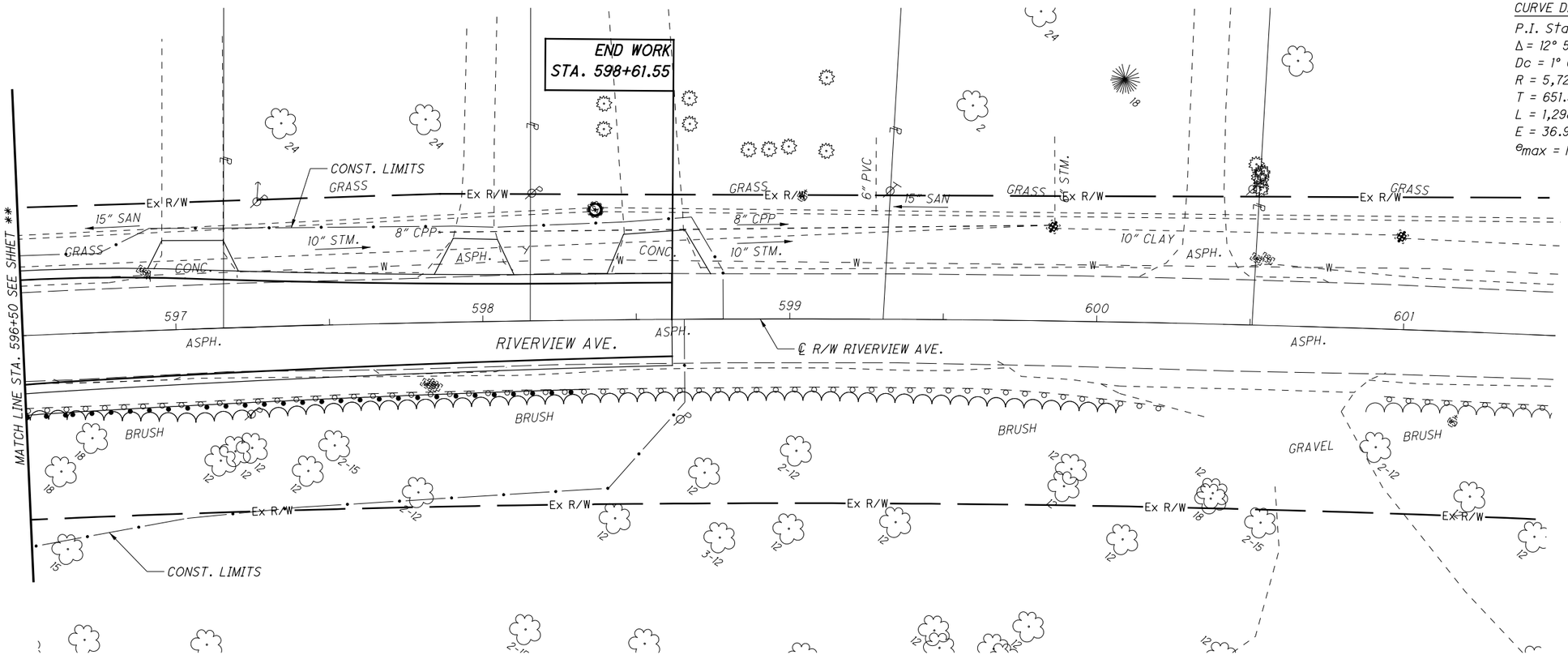

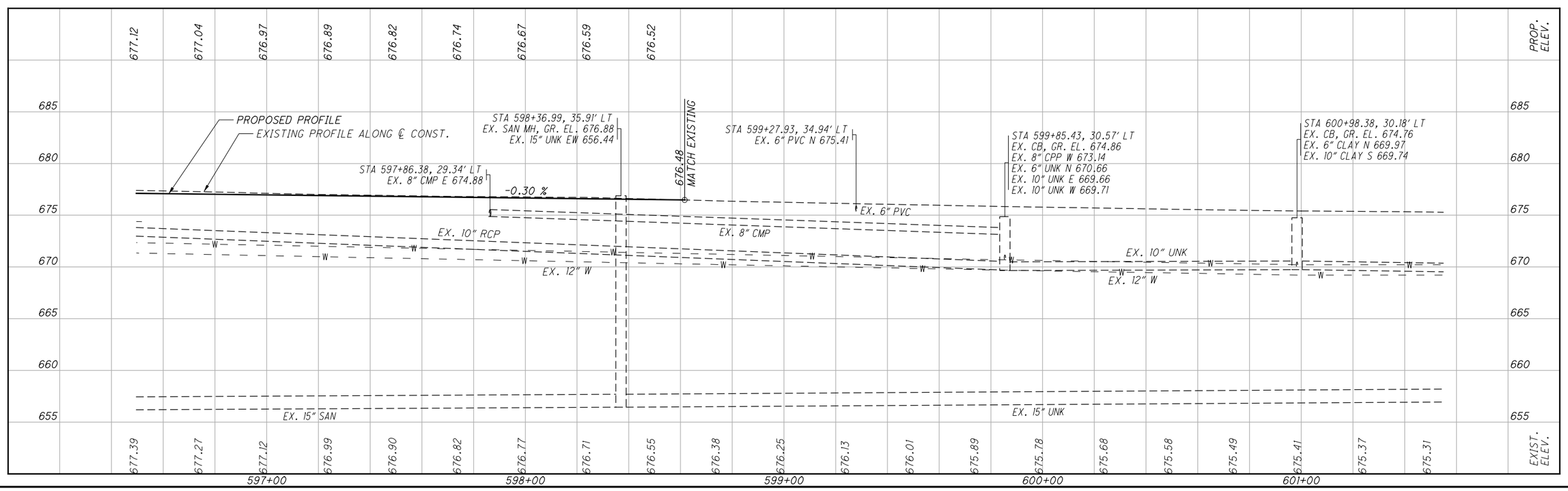

HORIZONTAL SCALE IN FEET 0 10 20 40

CALCULATED

CHECKED

PLAN AND PROFILE - RIVERVIEW AVE.
STA. 596+50 TO STA. 601+50.00

HEN-NEW MAUMEE RIVER BRIDGE

W:\Projects\Projects F-JNH2530002\22984\roadway\sheets\22984GP203.dgn 9/10/2014 5:18:13 PM SValentin

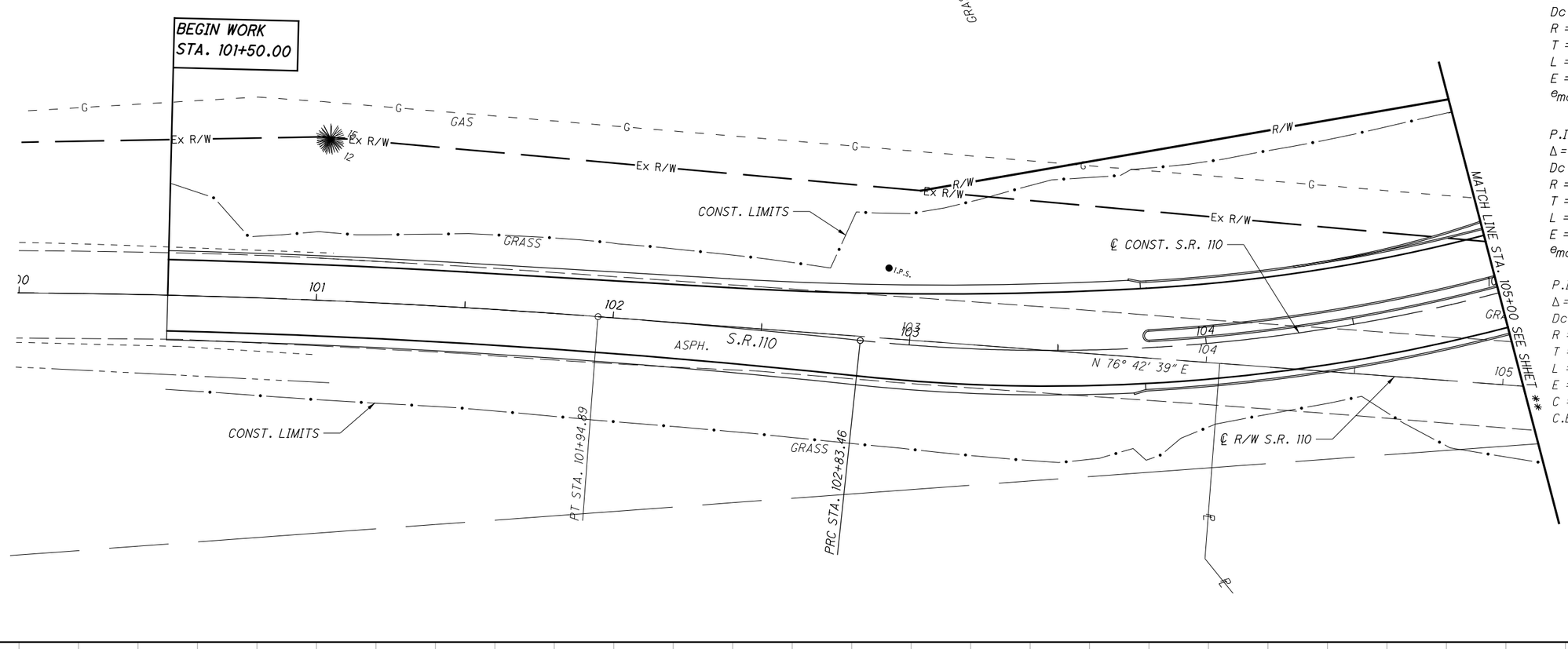

CURVE DATA - S.R. 110

P.I. STA. 103+94.64
Δ = 20° 59' 50" (LT)
Dc = 9° 32' 57"
R = 600.00'
T = 111.19'
L = 219.88'
E = 10.22'
e_{max} = NC

P.I. STA. 97+48.28
Δ = 21° 40' 09" (RT)
Dc = 2° 00' 00"
R = 2,864.80'
T = 548.28'
L = 1,083.46'
E = 51.99'
e_{max} = NC

P.I. STA. 90+33.37
Δ = 49° 52' 00" (RT)
Dc = 2° 00' 00"
R = 2,864.80'
T = 1,331.82'
L = 2,493.34'
E = 294.45'
C = 2,415.39'
C.B. = N 51° 46' 39" E

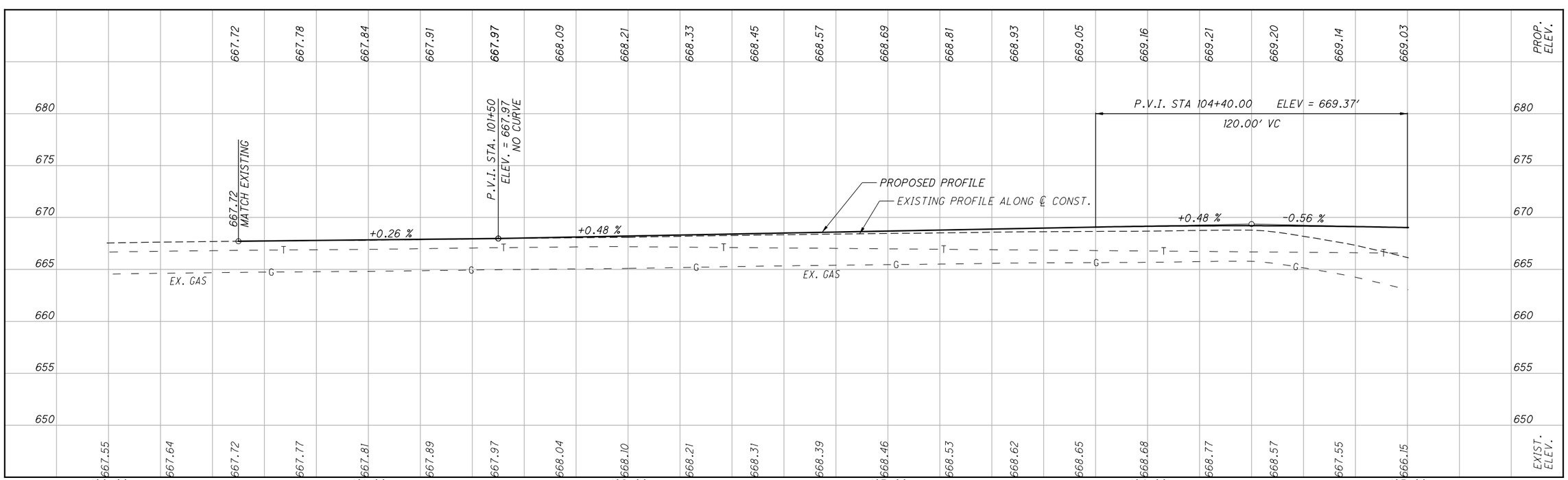

HORIZONTAL SCALE IN FEET
0 10 20 40

CALCULATED
CHECKED

PLAN AND PROFILE - S.R.110
STA. 100+00.00 TO STA. 105+00.00

HEN-NEW MAUMEE RIVER BRIDGE

W:\Projects\Projects F-JVH2530002\22984\roadway\sheets\22984GP301.dgn 9/10/2014 5:18:14 PM SValentin

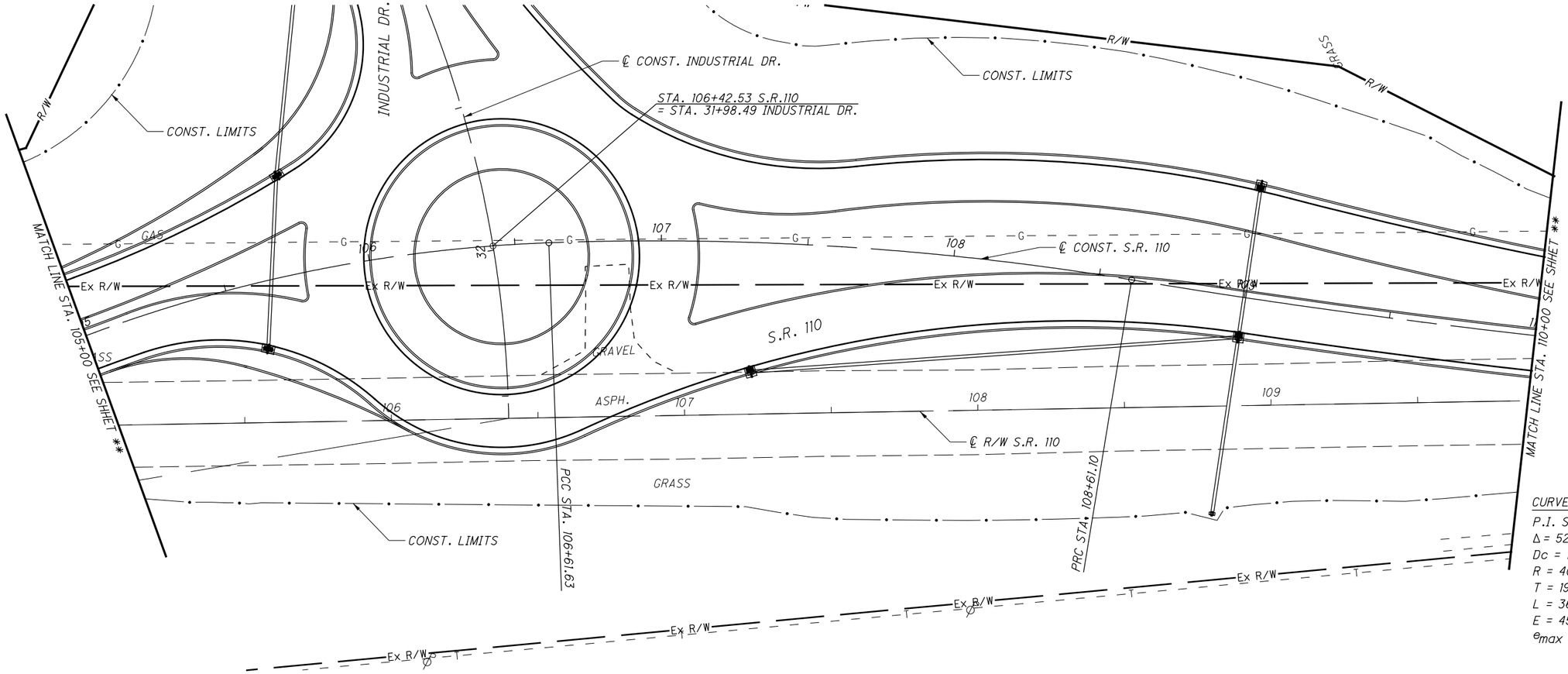

CURVE DATA - S.R. 110

P.I. STA. 105+83.15
Δ = 18° 08′ 21″ (RT)
Dc = 11° 27′ 33″
R = 500.00′
T = 79.81′
L = 158.29′
E = 6.33′
e_{max} = NC

P.I. STA. 107+61.70
Δ = 11° 25′ 43″ (RT)
Dc = 5° 43′ 46″
R = 1,000.00′
T = 100.06′
L = 199.47′
E = 4.99′
e_{max} = NC

P.I. STA. 111+03.62
Δ = 10° 20′ 30″ (LT)
Dc = 2° 08′ 16″
R = 2,680.00′
T = 242.53′
L = 483.74′
E = 10.95′
C = 483.08′
C.B. = N 81° 52′ 55″ E

CURVE DATA - INDUSTRIAL DR.

P.I. STA. 33+37.88
Δ = 52° 05′ 04″ (LT)
Dc = 14° 19′ 26″
R = 400.00′
T = 195.46′
L = 363.62′
E = 45.20′
e_{max} = NC

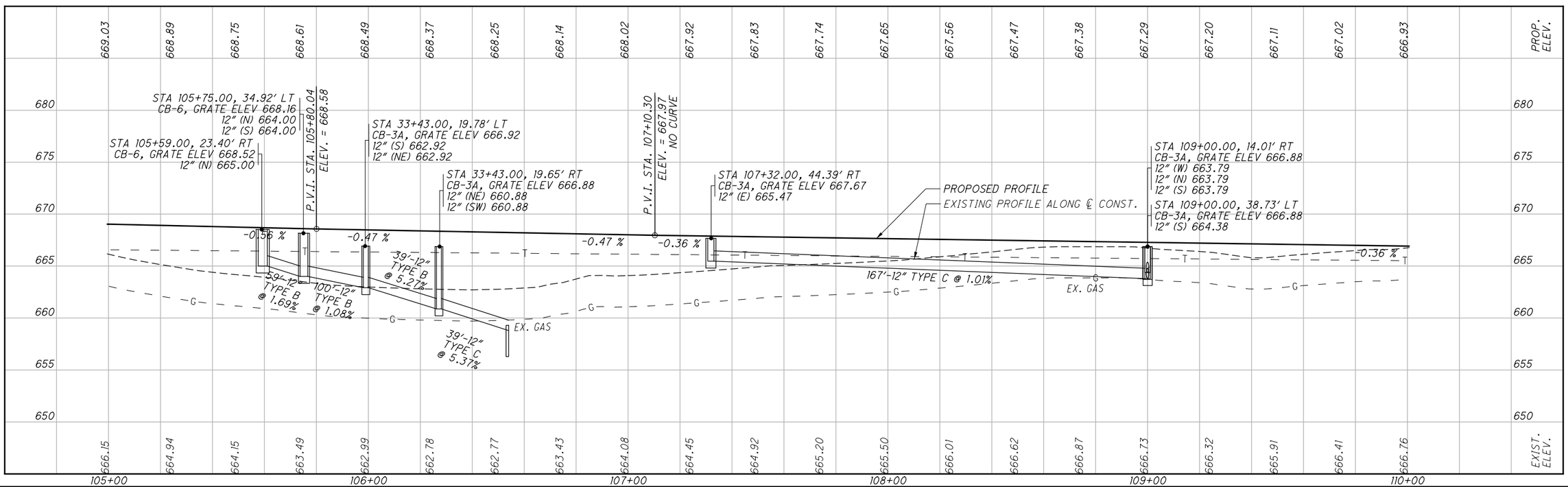

HORIZONTAL SCALE IN FEET
0 10 20 40

CALCULATED
CHECKED

PLAN AND PROFILE - S.R.110
STA. 105+00.00 TO STA. 110+00.00

HEN-NEW MAUMEE RIVER BRIDGE

W:\Projects\Projects F-J\H2530002\22984\roadway\sheets\22984GP302.dgn 9/10/2014 5:18:14 PM SValentin

CURVE DATA - S.R. 110

P.I. STA. 111+03.62
Δ = 10° 20′ 30″ (LT)
Dc = 2° 08′ 16″
R = 2,680.00′
T = 242.53′
L = 483.74′
E = 10.95′
C = 483.08′
C.B. = N 81° 52′ 55″ E

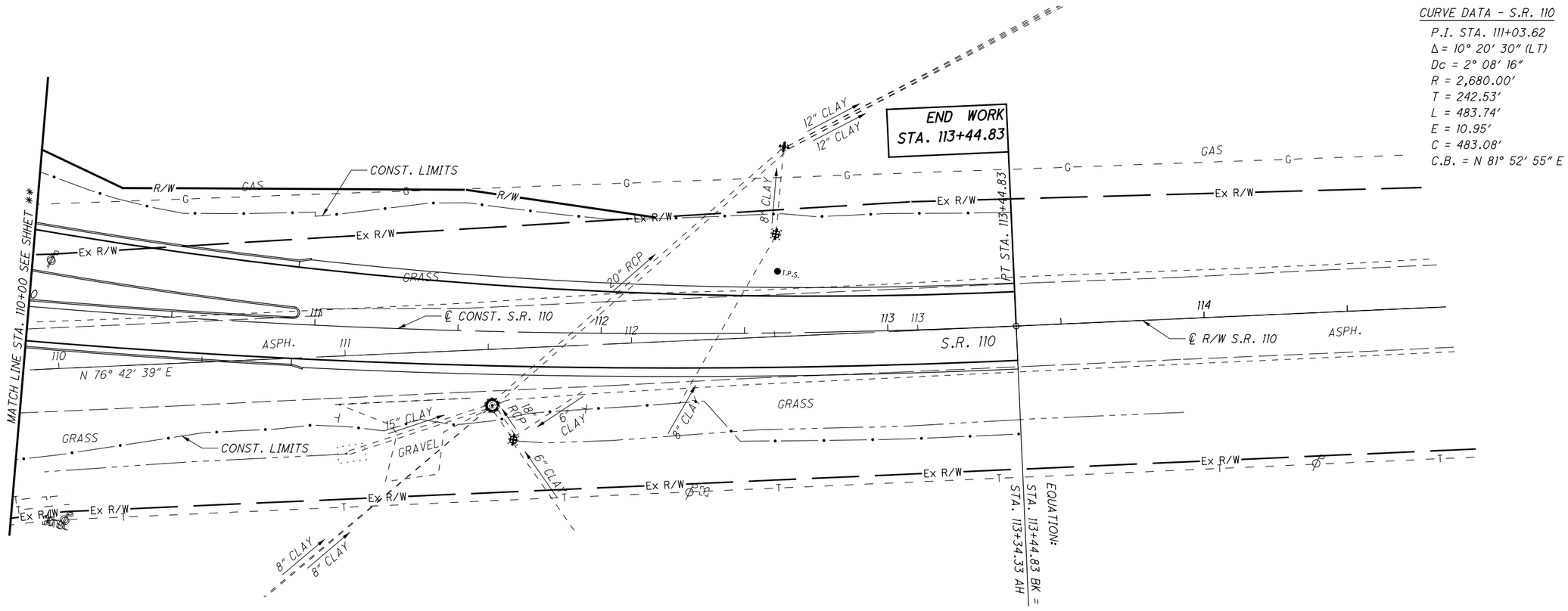

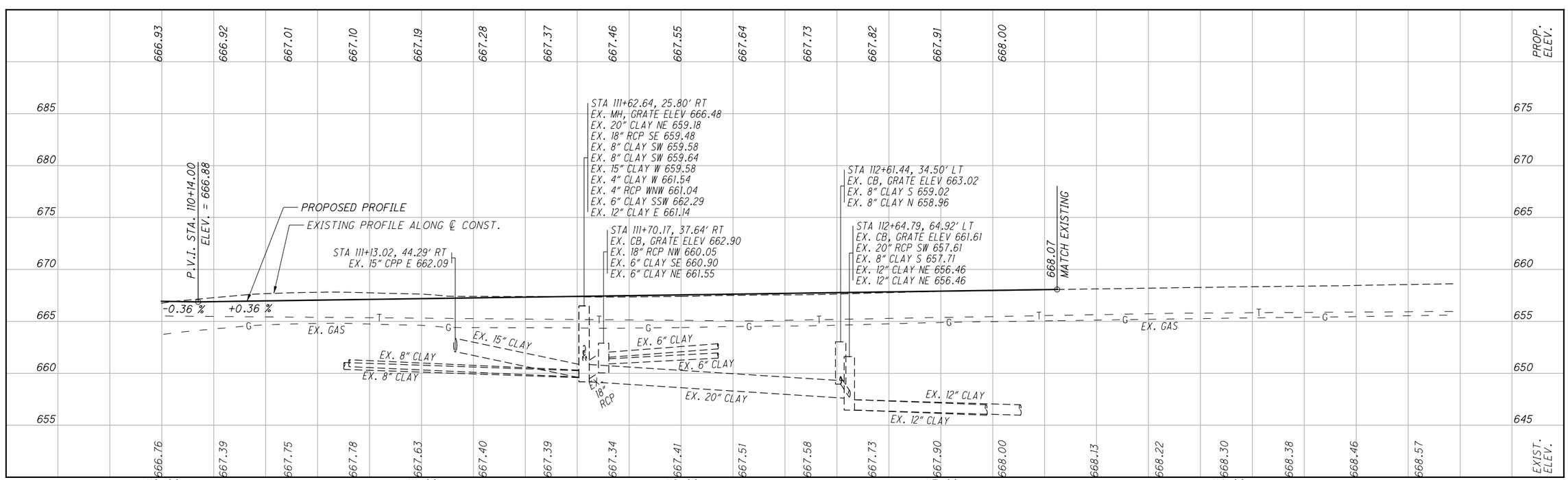

HORIZONTAL SCALE IN FEET
0 10 20 40

CALCULATED
CHECKED

PLAN AND PROFILE - S.R.110
STA. 110+00.00 TO STA. 115+00.00

HEN-NEW MAUMEE RIVER BRIDGE

W:\Projects\Projects F-JNH2530002\22984\roadway\sheets\22984GP303.dgn 9/10/2014 5:18:15 PM SValentin

SEEDING	
END WIDTH	SQ. YDS.

END AREA		VOLUME	
CUT	FILL	CUT	FILL

CALCULATED

CHECKED

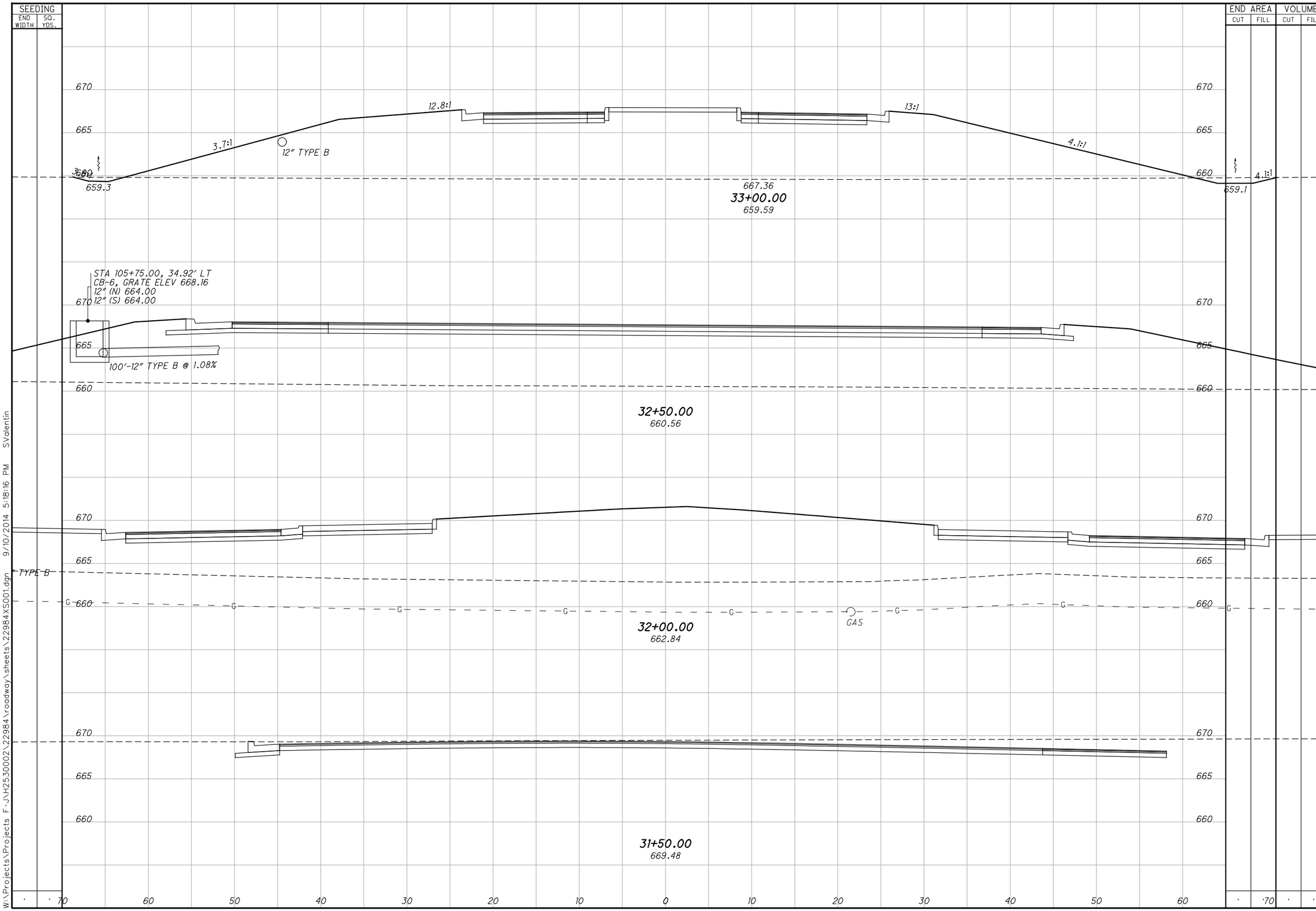

CROSS SECTIONS INDUSTRIAL DR.
STA. 31+50.00 TO STA. 33+00.00

HEN-NEW MAUMEE RIVER BRIDGE

W:\Projects\Projects F-JNH2530002\22984\roadway\sheets\22984XS001.dgn 9/10/2014 5:18:16 PM SValentin

SEEDING	
END WIDTH	SQ. YDS.

END AREA		VOLUME	
CUT	FILL	CUT	FILL

CALCULATED

CHECKED

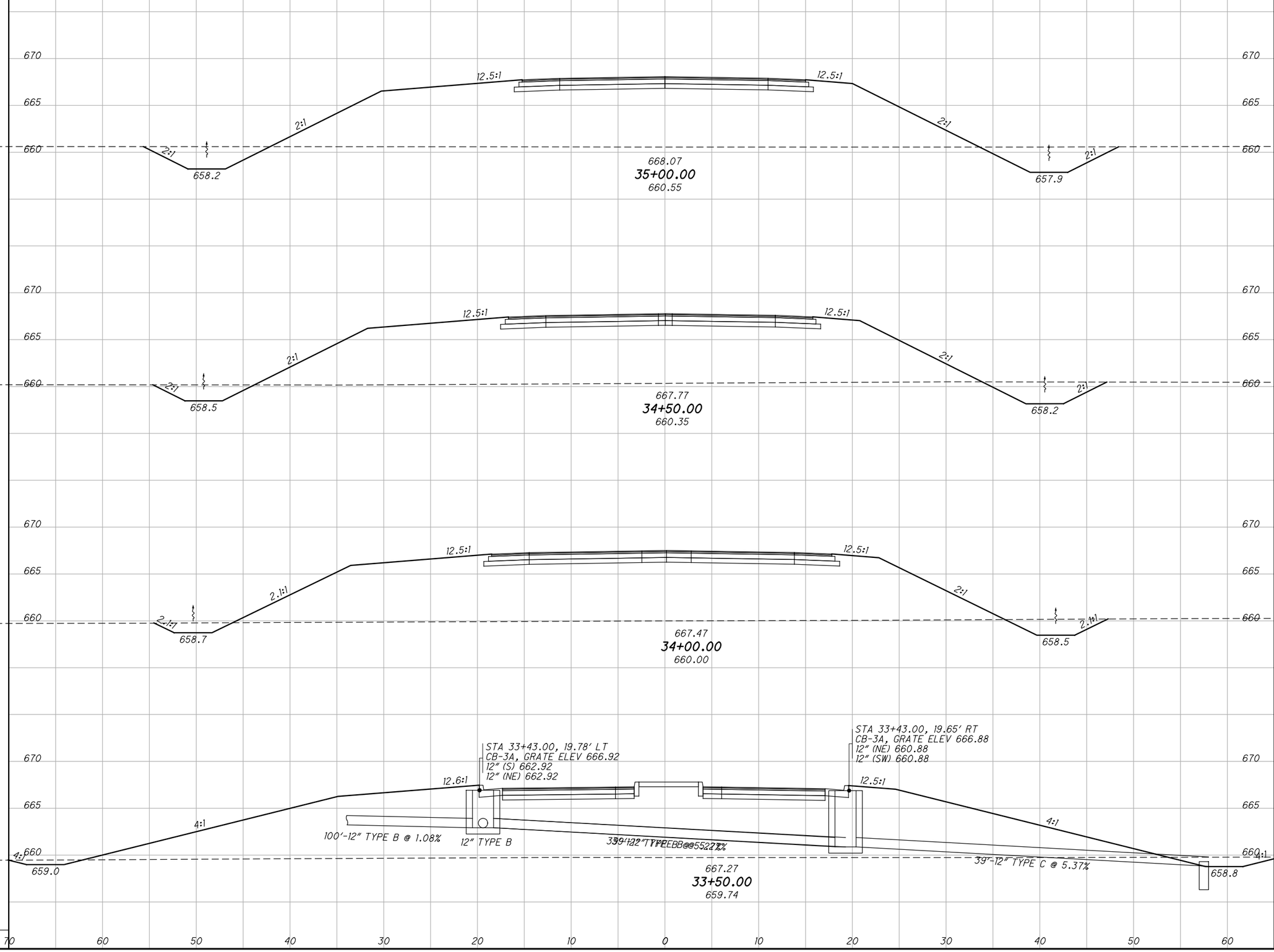

CROSS SECTIONS INDUSTRIAL DR.
STA. 33+50.00 TO STA. 35+00.00

HEN-NEW MAUMEE RIVER BRIDGE

W:\Projects\Projects F-JNH2530002\22984\roadway\sheets\22984XS001.dgn 9/10/2014 5:18:16 PM SValentin

SEEDING	
END WIDTH	SQ. YDS.

END AREA		VOLUME	
CUT	FILL	CUT	FILL

CALCULATED

CHECKED

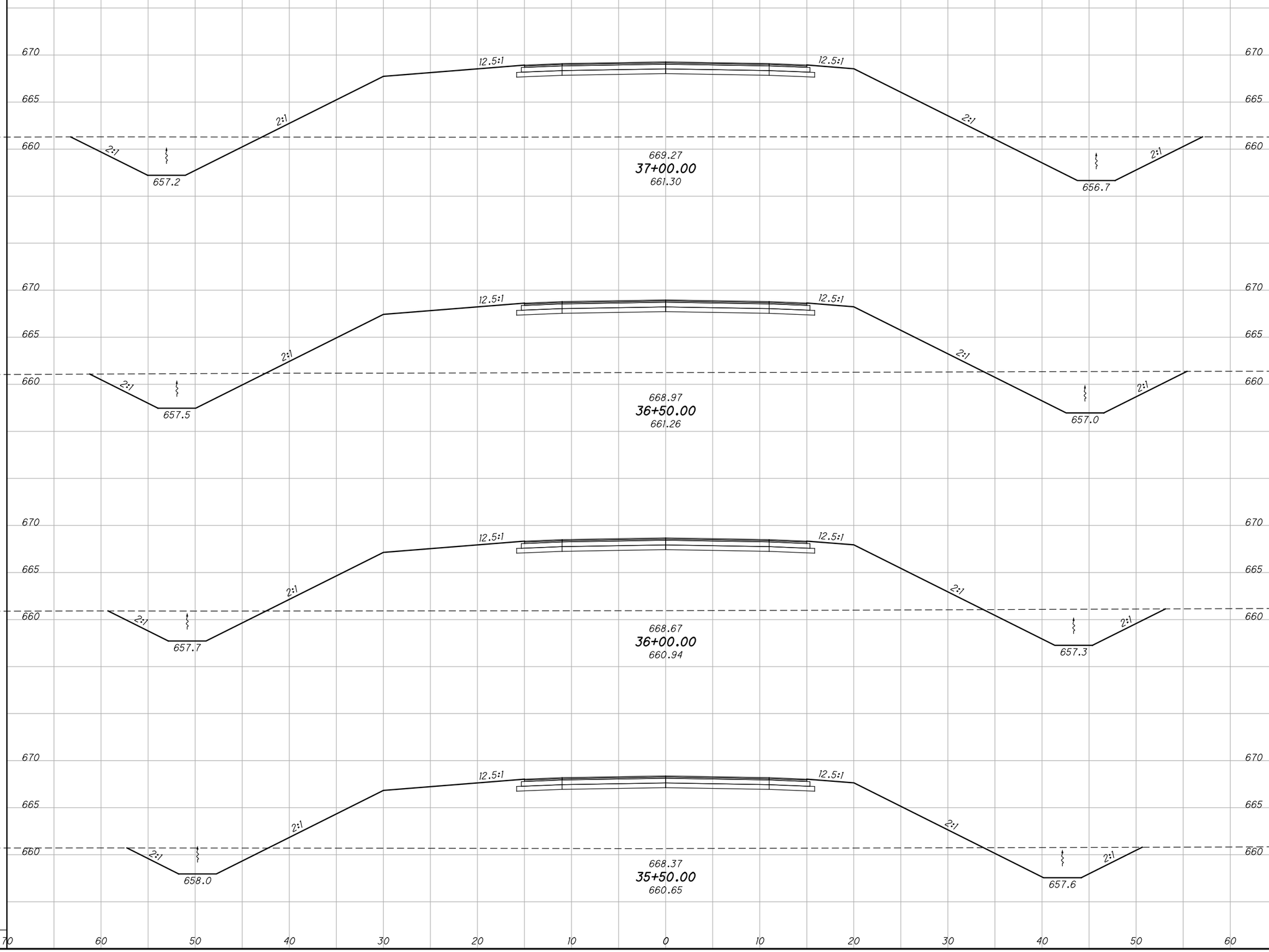

CROSS SECTIONS INDUSTRIAL DR.
STA. 35+50.00 TO STA. 37+00.00

HEN-NEW MAUMEE RIVER BRIDGE

W:\Projects\Projects F-J\H2530002\22984\roadway\sheets\22984XS001.dgn 9/10/2014 5:18:17 PM SValentin

SEEDING	
END WIDTH	SQ. YDS.

END AREA		VOLUME	
CUT	FILL	CUT	FILL

CALCULATED

CHECKED

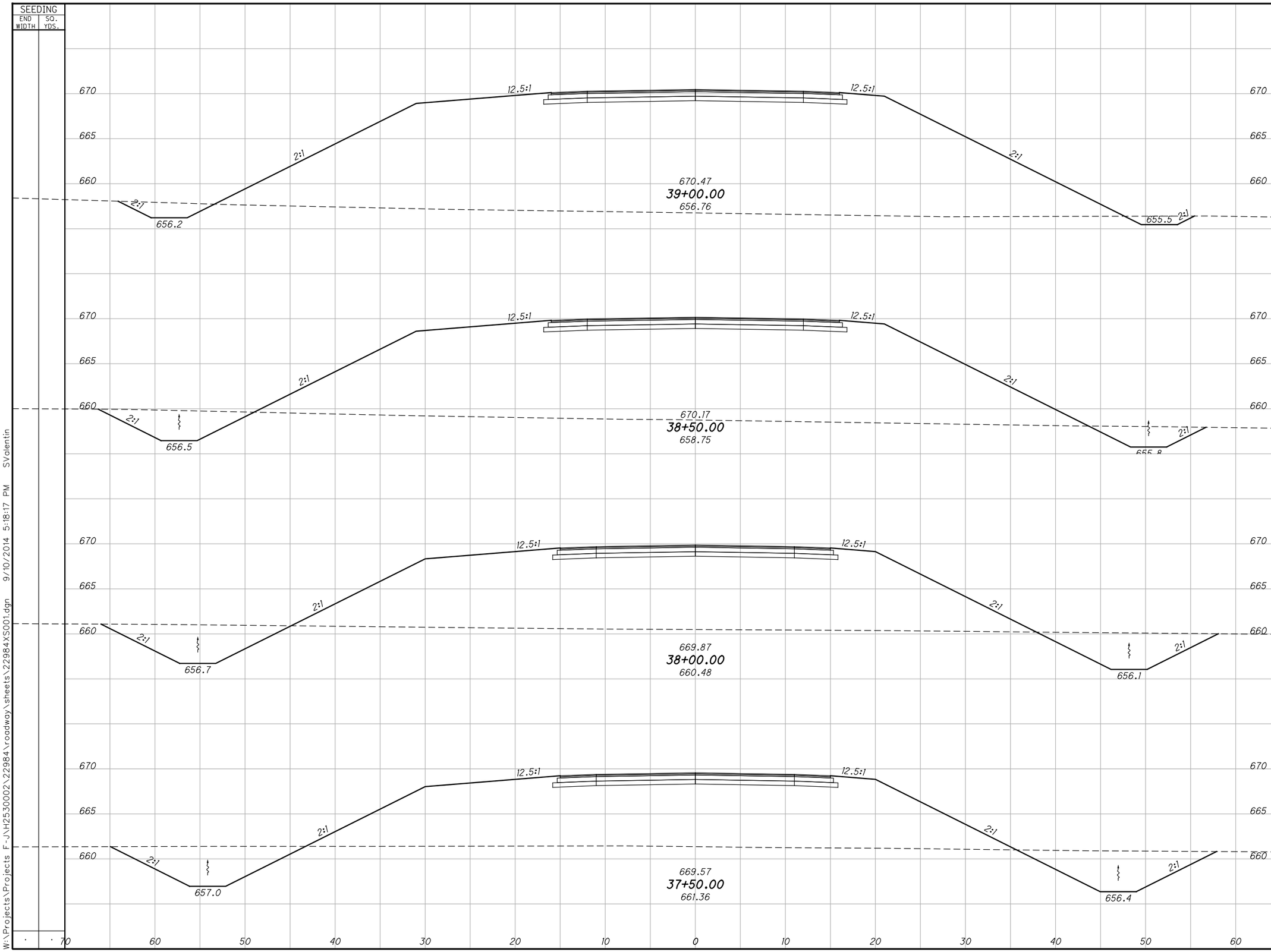

CROSS SECTIONS INDUSTRIAL DR.
STA. 37+50.00 TO STA. 39+00.00

HEN-NEW MAUMEE RIVER BRIDGE

W:\Projects\Projects F-JNH2530002\22984\roadway\sheets\22984XS001.dgn 9/10/2014 5:18:17 PM SValentin

SEEDING	
END WIDTH	SQ. YDS.

END AREA		VOLUME	
CUT	FILL	CUT	FILL

CALCULATED

CHECKED

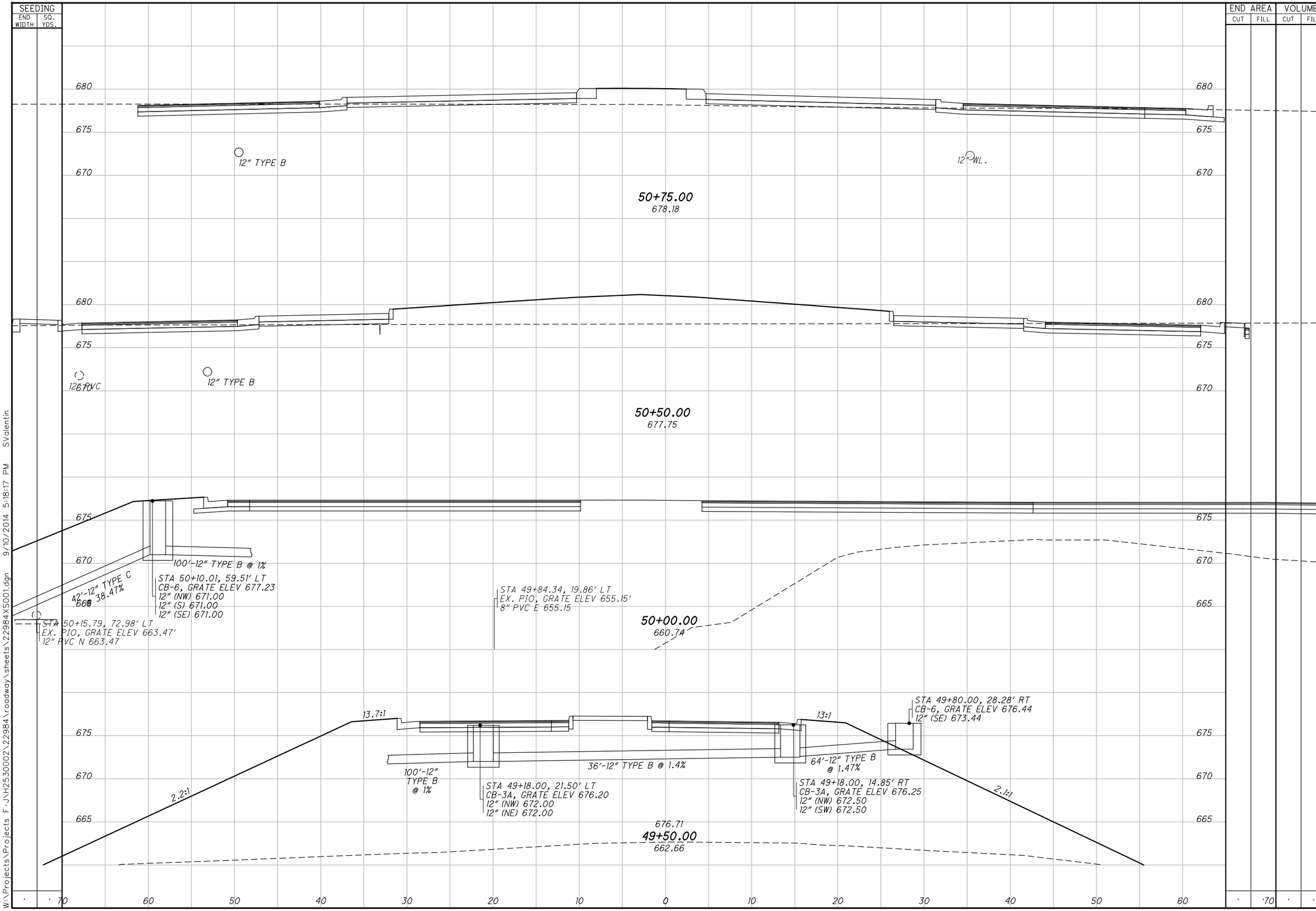

CROSS SECTIONS INDUSTRIAL DR.
STA. 49+50.00 TO STA. 50+75.00

HEN-NEW MAUMEE RIVER BRIDGE

W:\Projects\Projects F-JNH2530002\22984\roadway\sheets\22984XS001.dgn 9/10/2014 5:18:17 PM SValentin

SEEDING	
END WIDTH	SQ. YDS.

END AREA		VOLUME	
CUT	FILL	CUT	FILL

CALCULATED

CHECKED

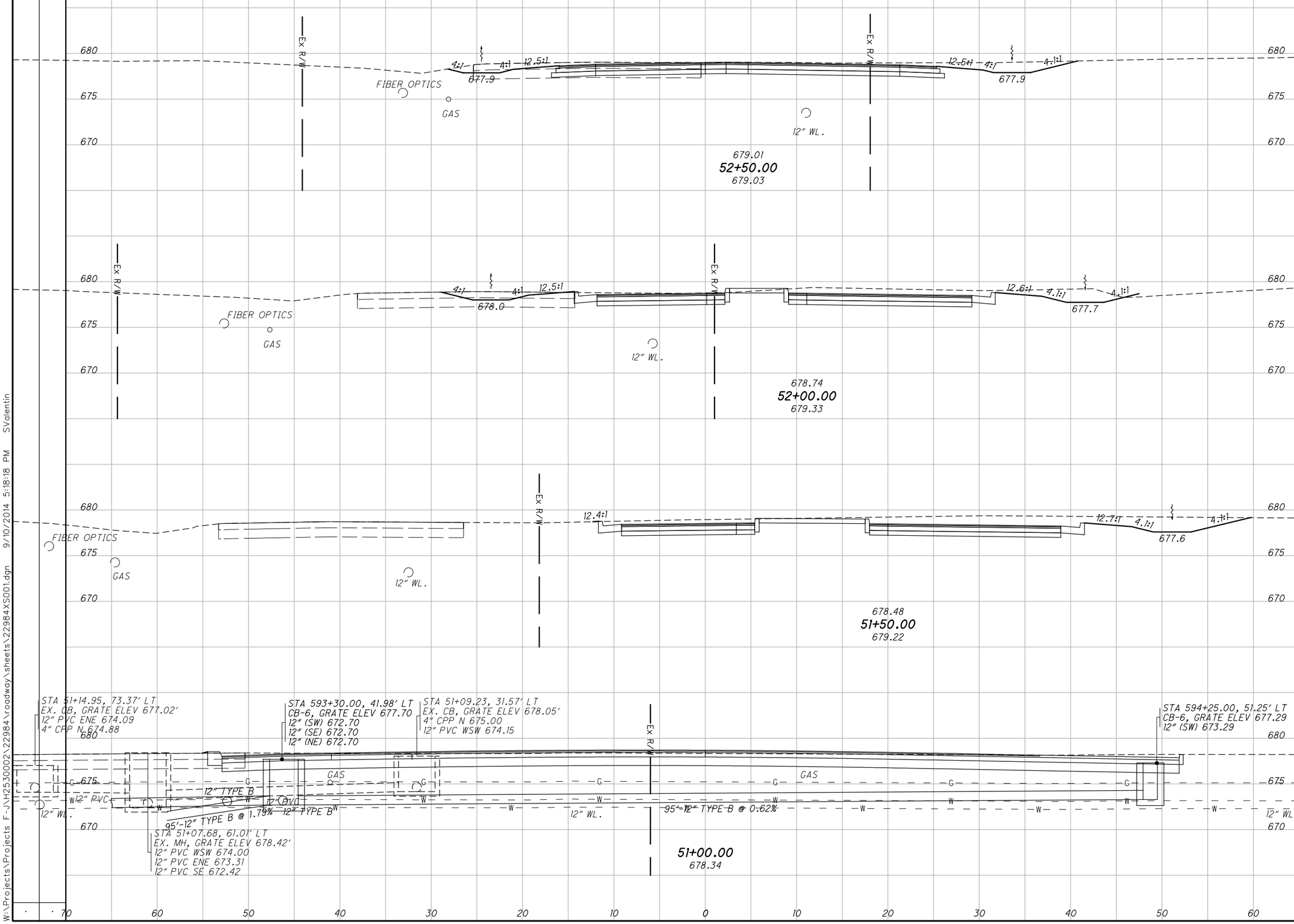

CROSS SECTIONS INDUSTRIAL DR.
STA. 51+00.00 TO STA. 52+50.00

HEN-NEW MAUMEE RIVER BRIDGE

W:\Projects\Projects F-JN2530002\22984\roadway\sheets\22984XS001.dgn 9/10/2014 5:18:18 PM SValentin

SEEDING	
END WIDTH	SQ. YDS.

END AREA		VOLUME	
CUT	FILL	CUT	FILL

CALCULATED

CHECKED

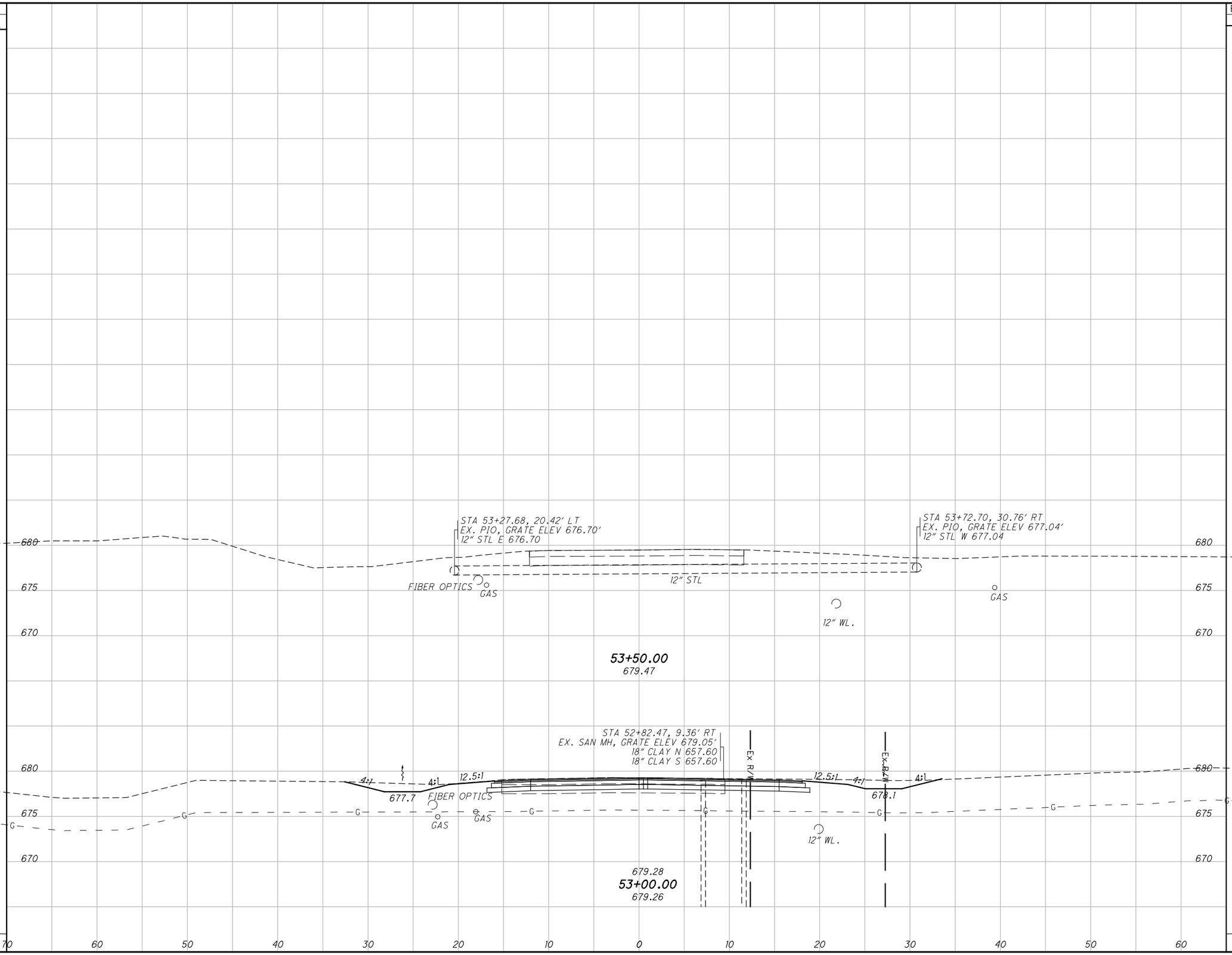

CROSS SECTIONS INDUSTRIAL DR.
STA. 53+00.00 TO STA. 53+50.00

HEN-NEW MAUMEE RIVER BRIDGE

W:\Projects\Projects F-JNH2530002\22984\roadway\sheets\22984XS001.dgn 9/10/2014 5:18:18 PM SValentin

SEEDING	
END WIDTH	SQ. YDS.

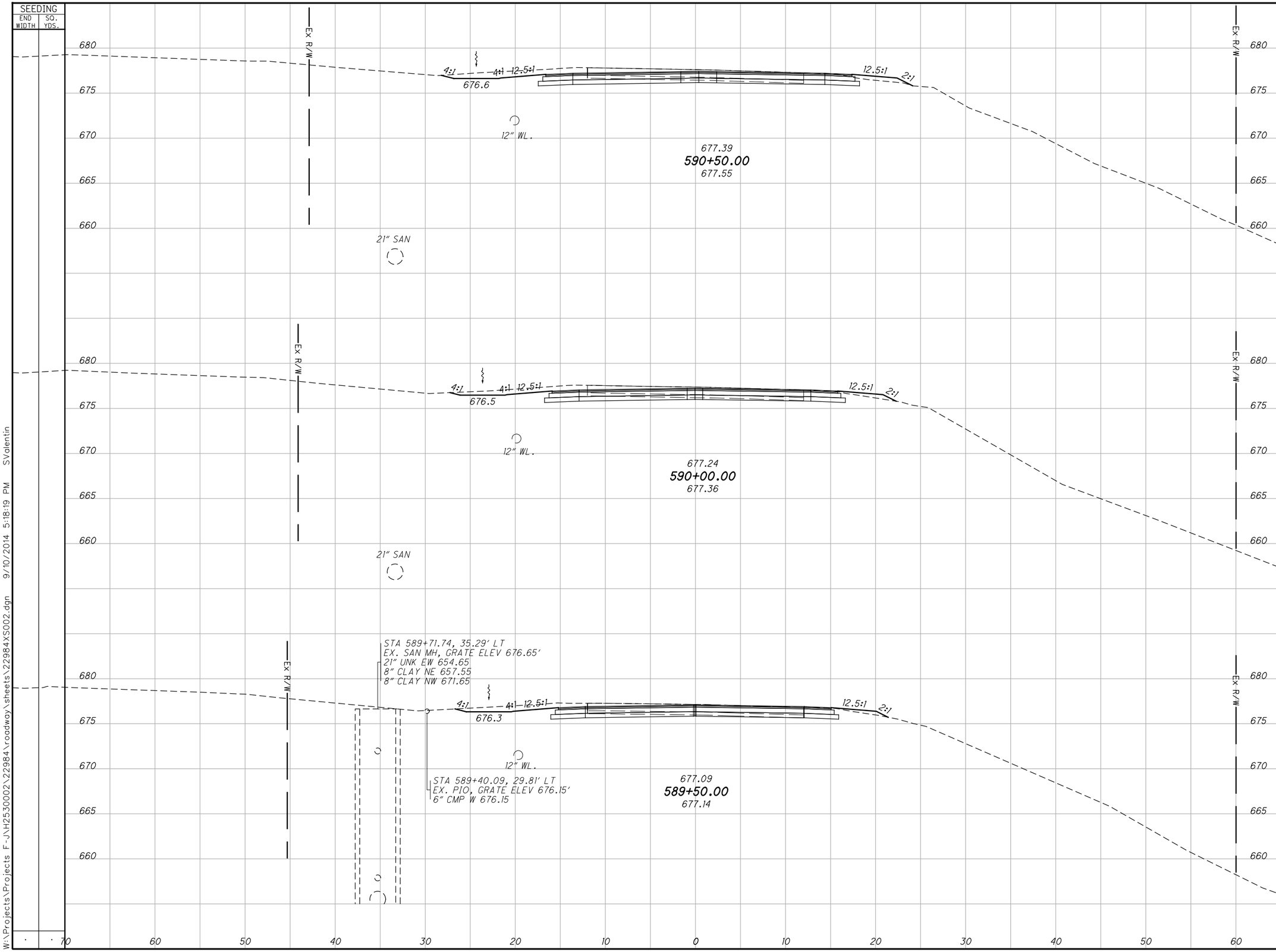

END AREA		VOLUME	
CUT	FILL	CUT	FILL

CALCULATED

CHECKED

CROSS SECTIONS RIVERVIEW AVE.
STA. 589+50.00 TO STA. 590+50.00

HEN-NEW MAUMEE RIVER BRIDGE

W:\Projects\Projects F-JNH2530002\22984\roadway\sheets\22984XS002.dgn 9/10/2014 5:18:19 PM SValentin

SEEDING	
END WIDTH	SQ. YDS.

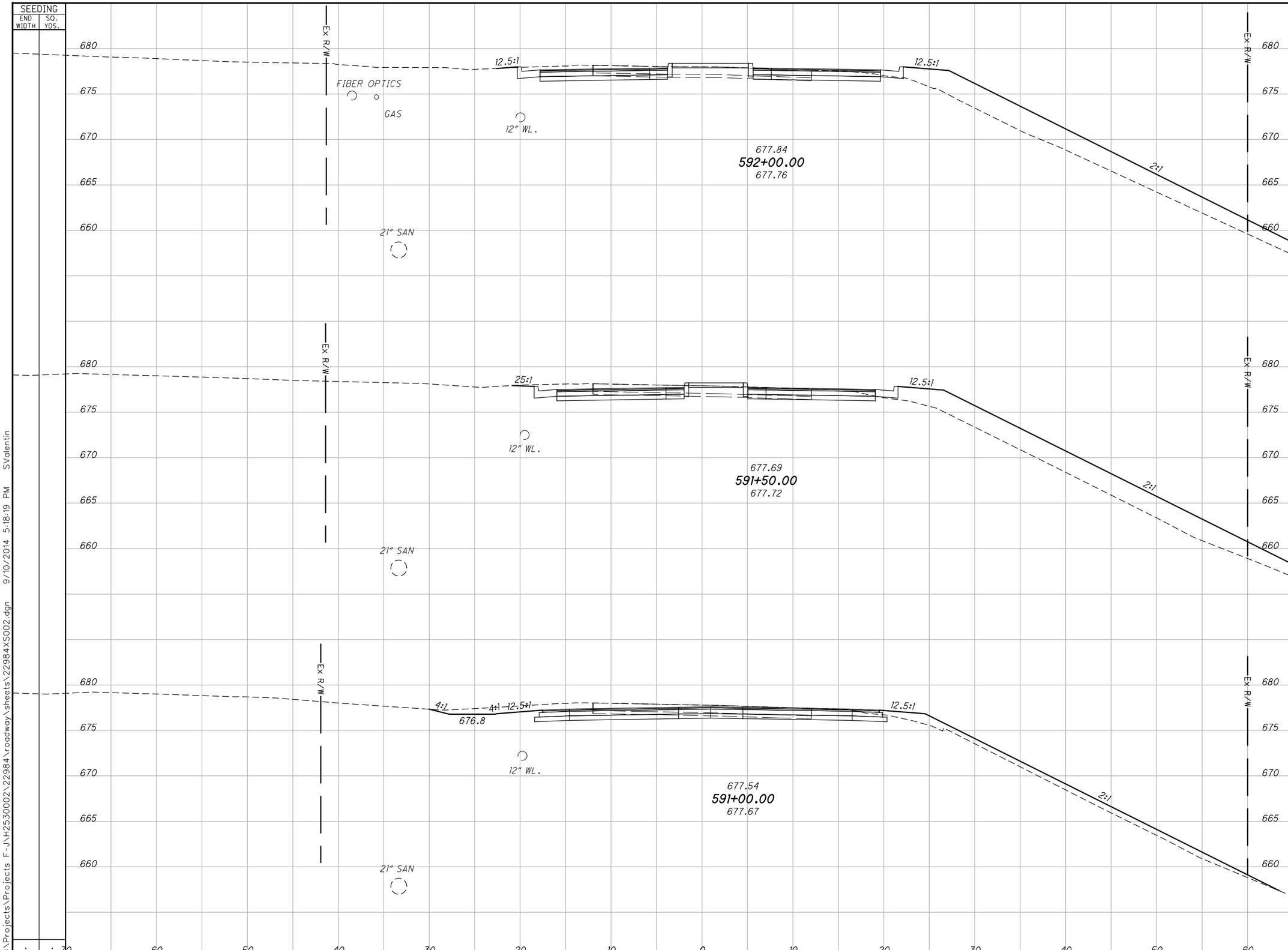

END AREA		VOLUME	
CUT	FILL	CUT	FILL

CALCULATED

CHECKED

CROSS SECTIONS RIVERVIEW AVE.
STA. 591+00.00 TO STA. 592+00.00

HEN-NEW MAUMEE RIVER BRIDGE

W:\Projects\Projects F-J\H25300002\22984\roadway\sheets\22984XS002.dgn 9/10/2014 5:18:19 PM SValentin

SEEDING	
END WIDTH	SQ. YDS.

END AREA		VOLUME	
CUT	FILL	CUT	FILL

CALCULATED

CHECKED

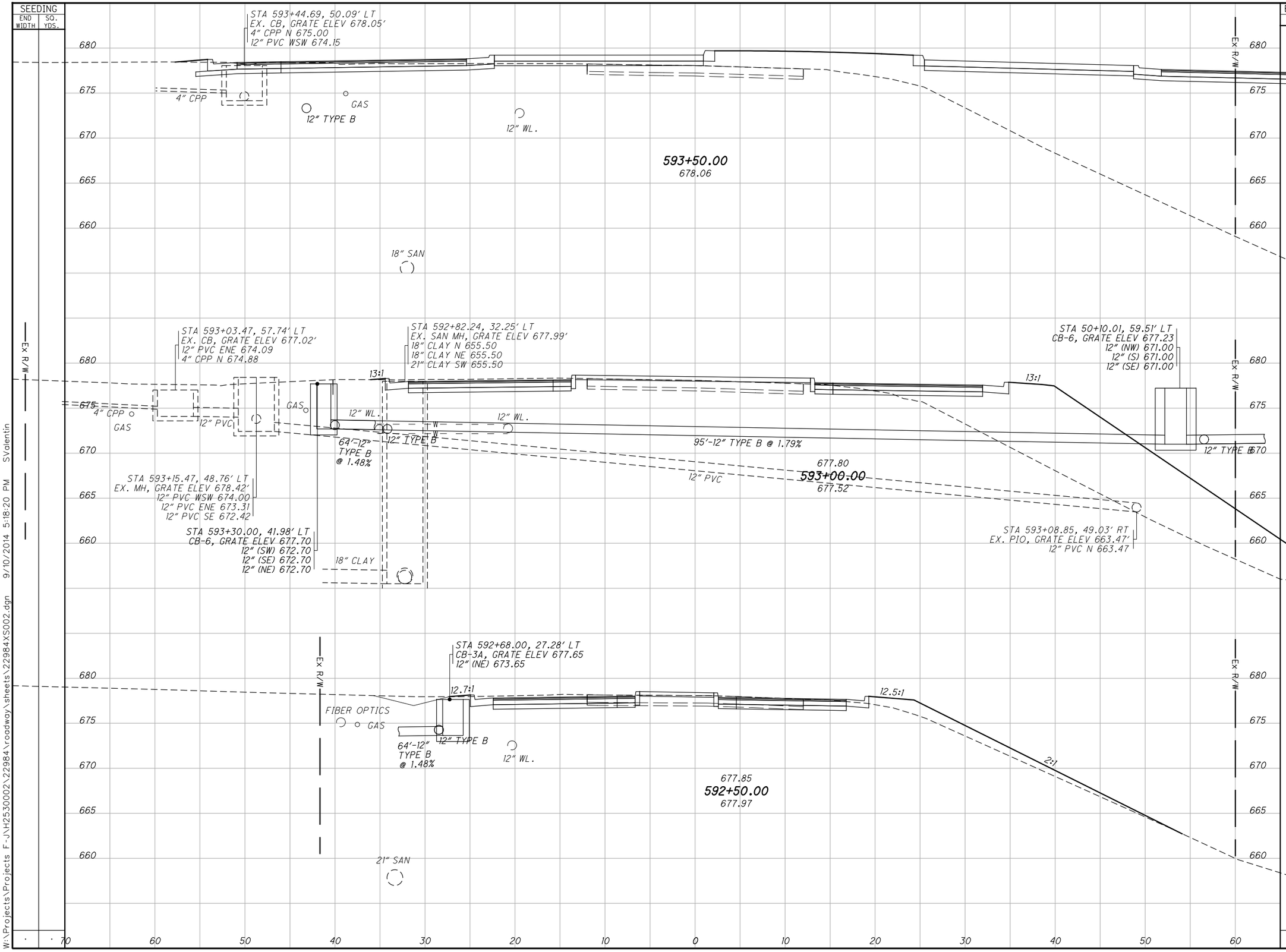

CROSS SECTIONS RIVERVIEW AVE.
STA. 592+50.00 TO STA. 593+50.00

HEN-NEW MAUMEE RIVER BRIDGE

W:\Projects\Projects F-JNH2530002\22984\roadway\sheets\22984XS002.dgn 9/10/2014 5:18:20 PM SValentin

SEEDING	
END WIDTH	SQ. YDS.

END AREA		VOLUME	
CUT	FILL	CUT	FILL

CALCULATED

CHECKED

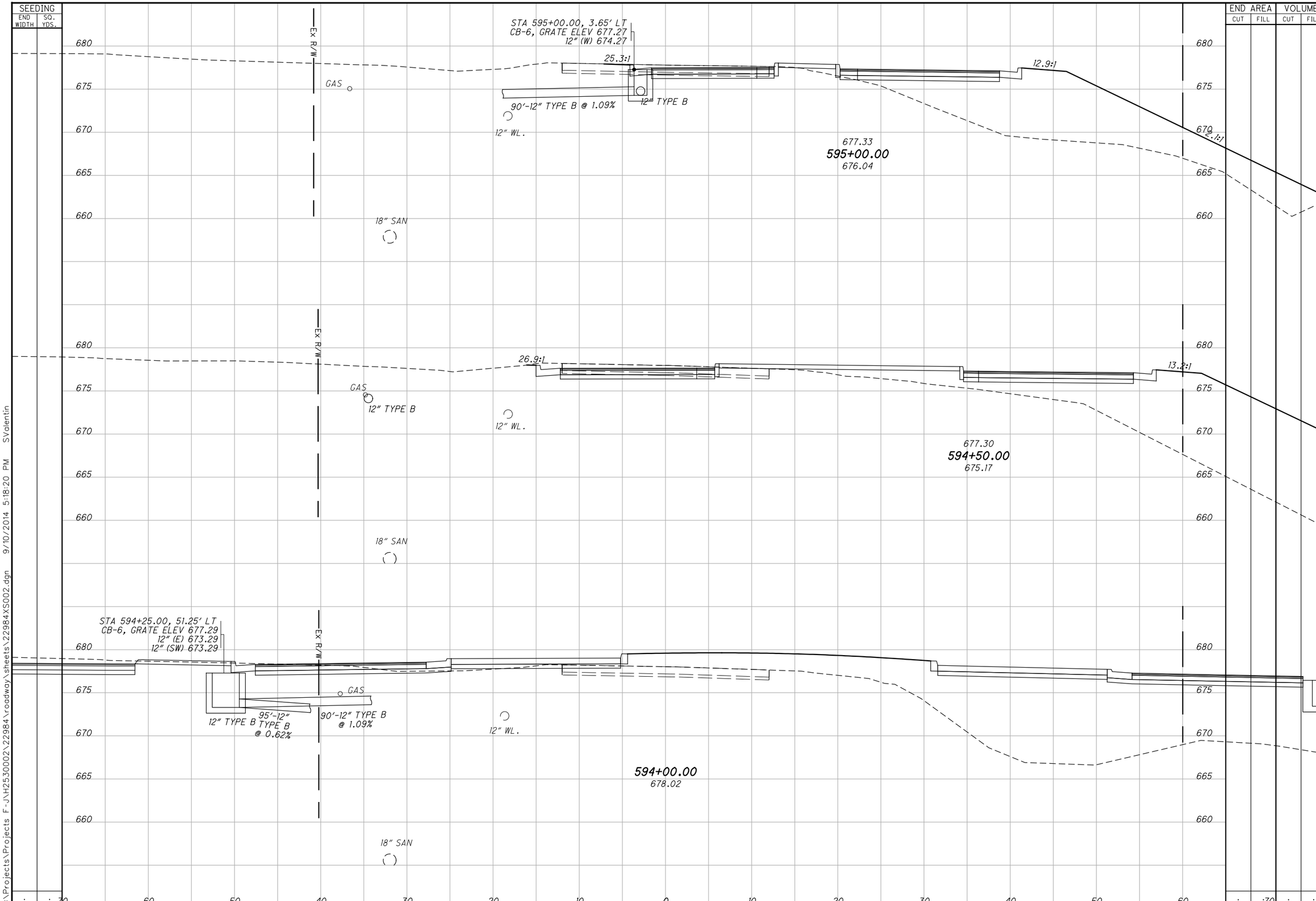

CROSS SECTIONS RIVERVIEW AVE.
STA. 594+00.00 TO STA. 595+00.00

HEN-NEW MAUMEE RIVER BRIDGE

W:\Projects\Projects F-J\H25300002\22984\roadway\sheets\22984XS002.dgn 9/10/2014 5:18:20 PM SValentin

SEEDING	
END WIDTH	SQ. YDS.

END AREA		VOLUME	
CUT	FILL	CUT	FILL

CALCULATED

CHECKED

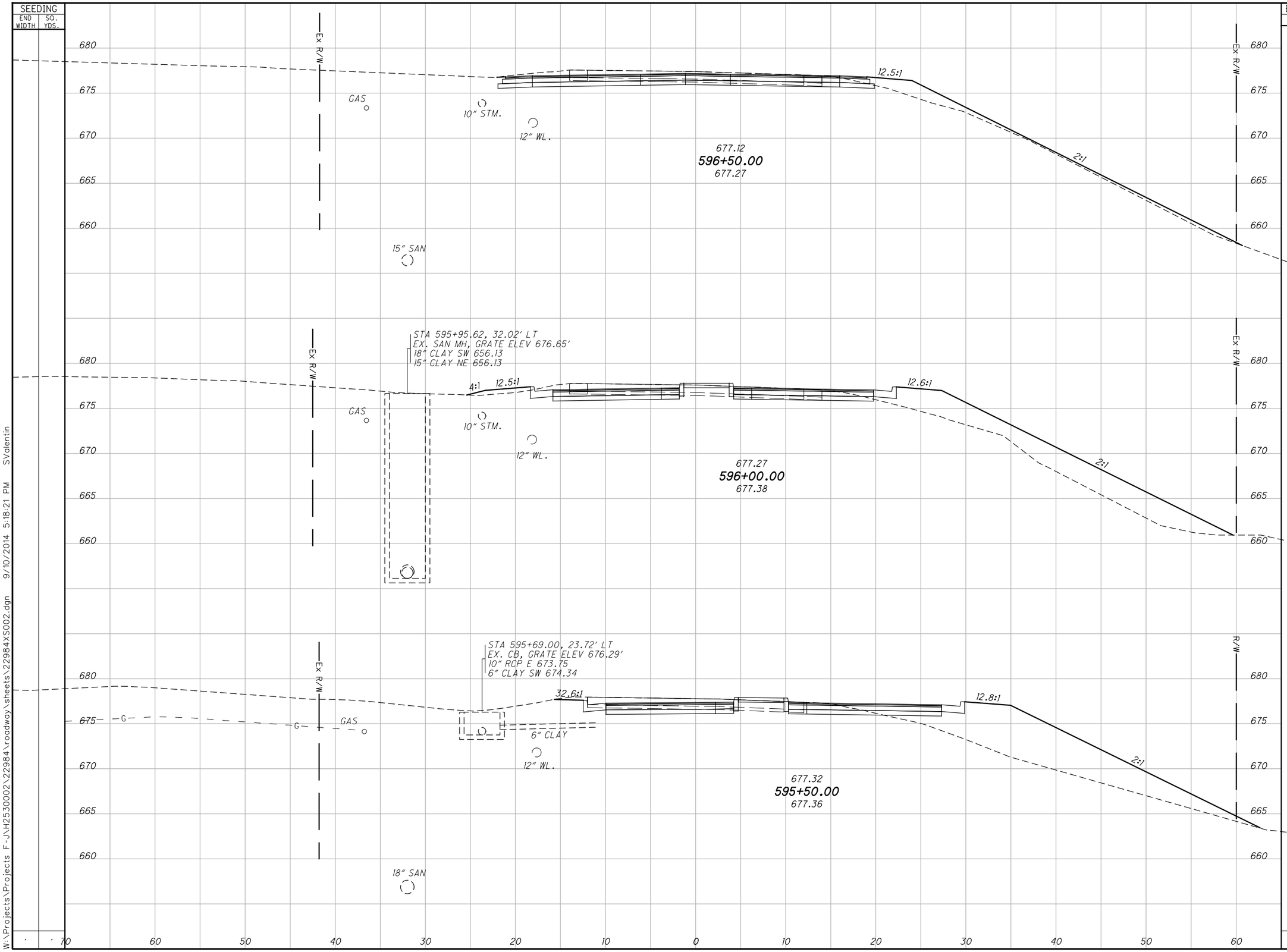

CROSS SECTIONS RIVERVIEW AVE.
STA. 595+50.00 TO STA. 596+50.00

HEN-NEW MAUMEE RIVER BRIDGE

W:\Projects\Projects F-J\H25300002\22984\roadway\sheets\22984XS002.dgn 9/10/2014 5:18:21 PM SValentin

SEEDING	
END WIDTH	SQ. YDS.

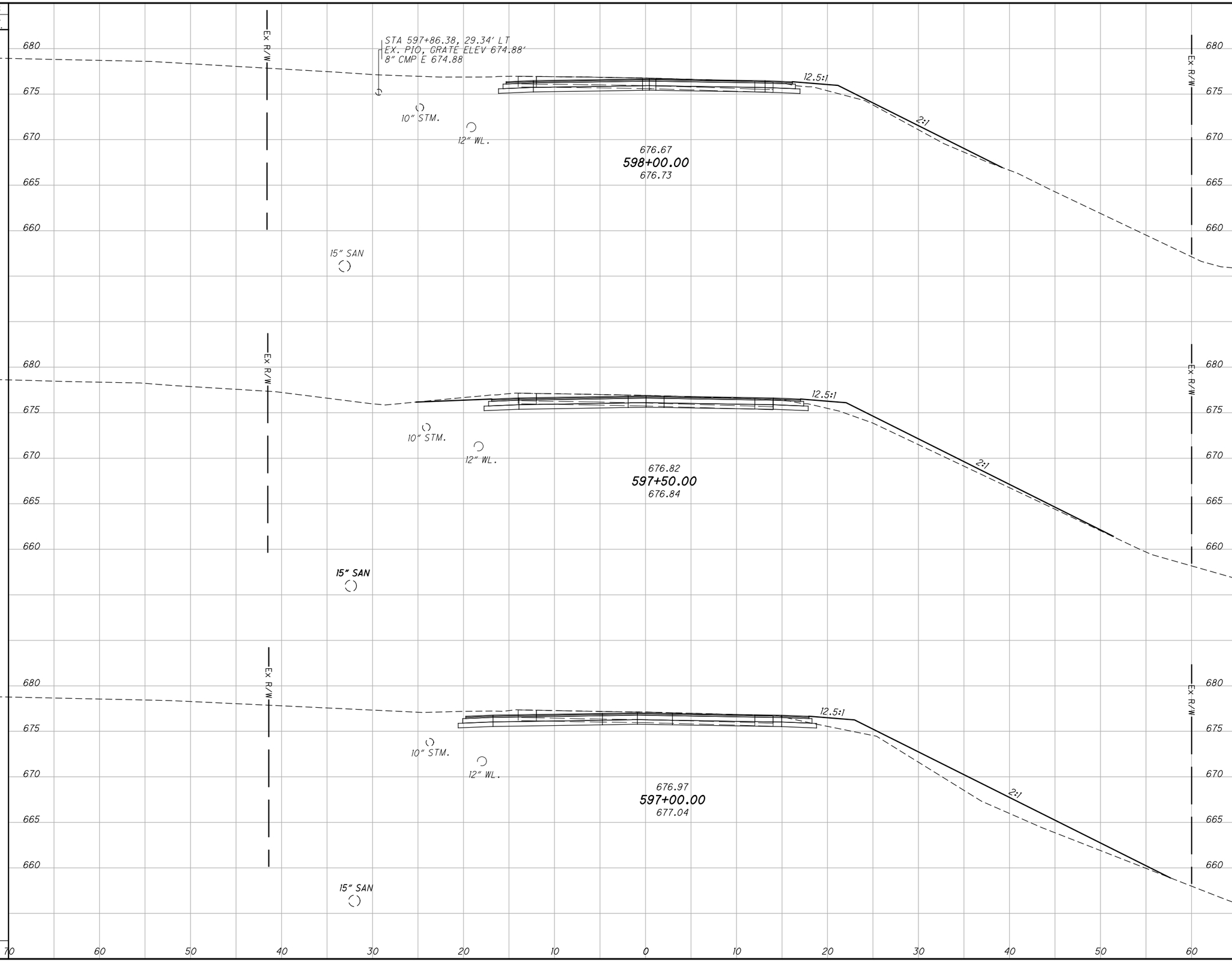

END AREA		VOLUME	
CUT	FILL	CUT	FILL

CALCULATED

CHECKED

CROSS SECTIONS RIVERVIEW AVE.
STA. 597+00.00 TO STA. 598+00.00

HEN-NEW MAUMEE RIVER BRIDGE

W:\Projects\Projects F-J\H2530002\22984\roadway\sheets\22984XS002.dgn 9/10/2014 5:18:21 PM SValentin

SEEDING	
END WIDTH	SQ. YDS.

END AREA		VOLUME	
CUT	FILL	CUT	FILL

CALCULATED

CHECKED

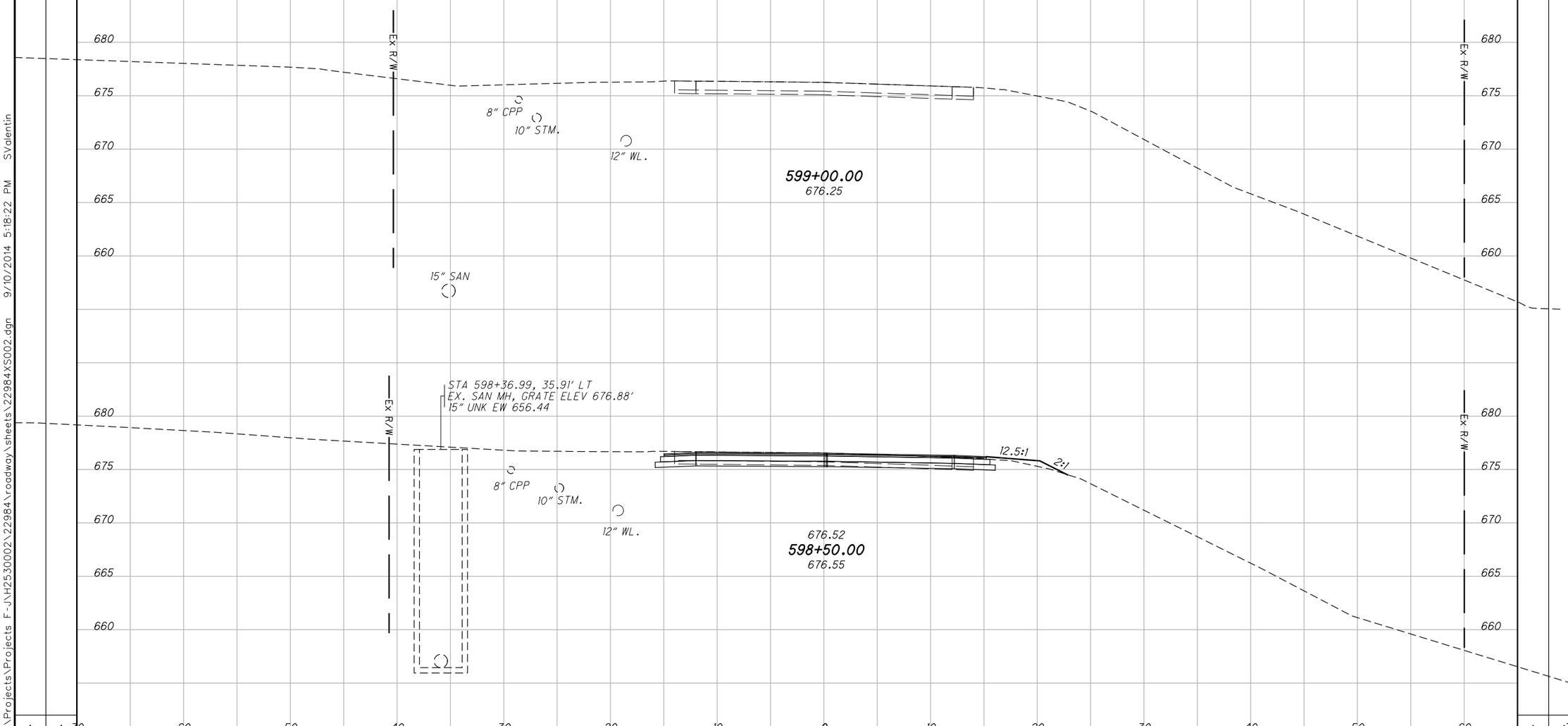

CROSS SECTIONS RIVERVIEW AVE.
STA. 598+50.00 TO STA. 599+00.00

HEN-NEW MAUMEE RIVER BRIDGE

W:\Projects\Projects F-J\H25300\22984\roadway\sheets\22984XS002.dgn 9/10/2014 5:18:22 PM SValentin

SEEDING	
END WIDTH	SQ. YDS.

END AREA		VOLUME	
CUT	FILL	CUT	FILL

CALCULATED

CHECKED

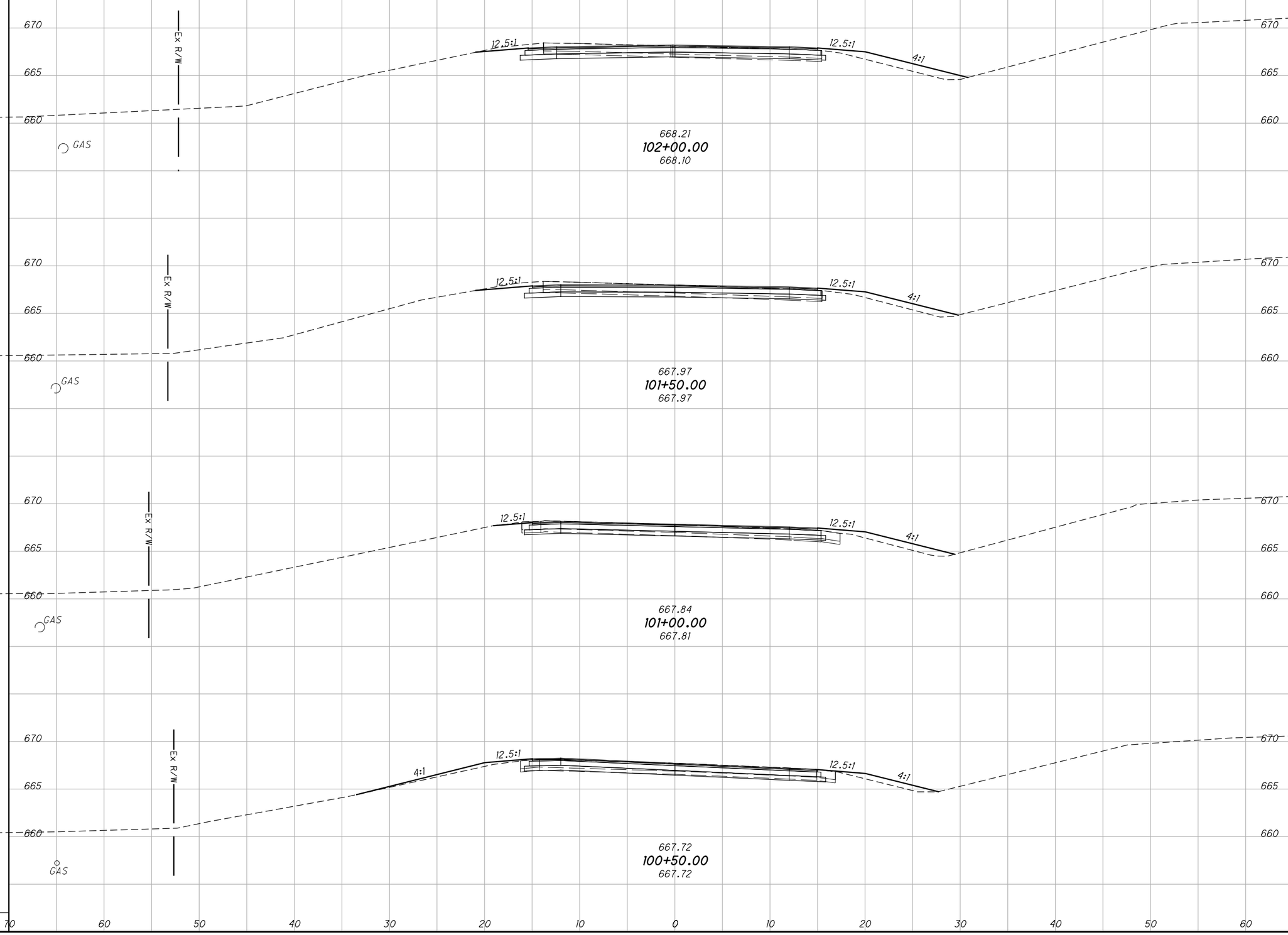

CROSS SECTIONS S.R.110
STA. 100+50.00 TO STA. 102+00.00

HEN-NEW MAUMEE RIVER BRIDGE

W:\Projects\Projects F-JNH2530002\22984\roadway\sheets\22984XS003.dgn 9/10/2014 5:18:22 PM SValentin

SEEDING	
END WIDTH	SQ. YDS.

END AREA		VOLUME	
CUT	FILL	CUT	FILL

CALCULATED

CHECKED

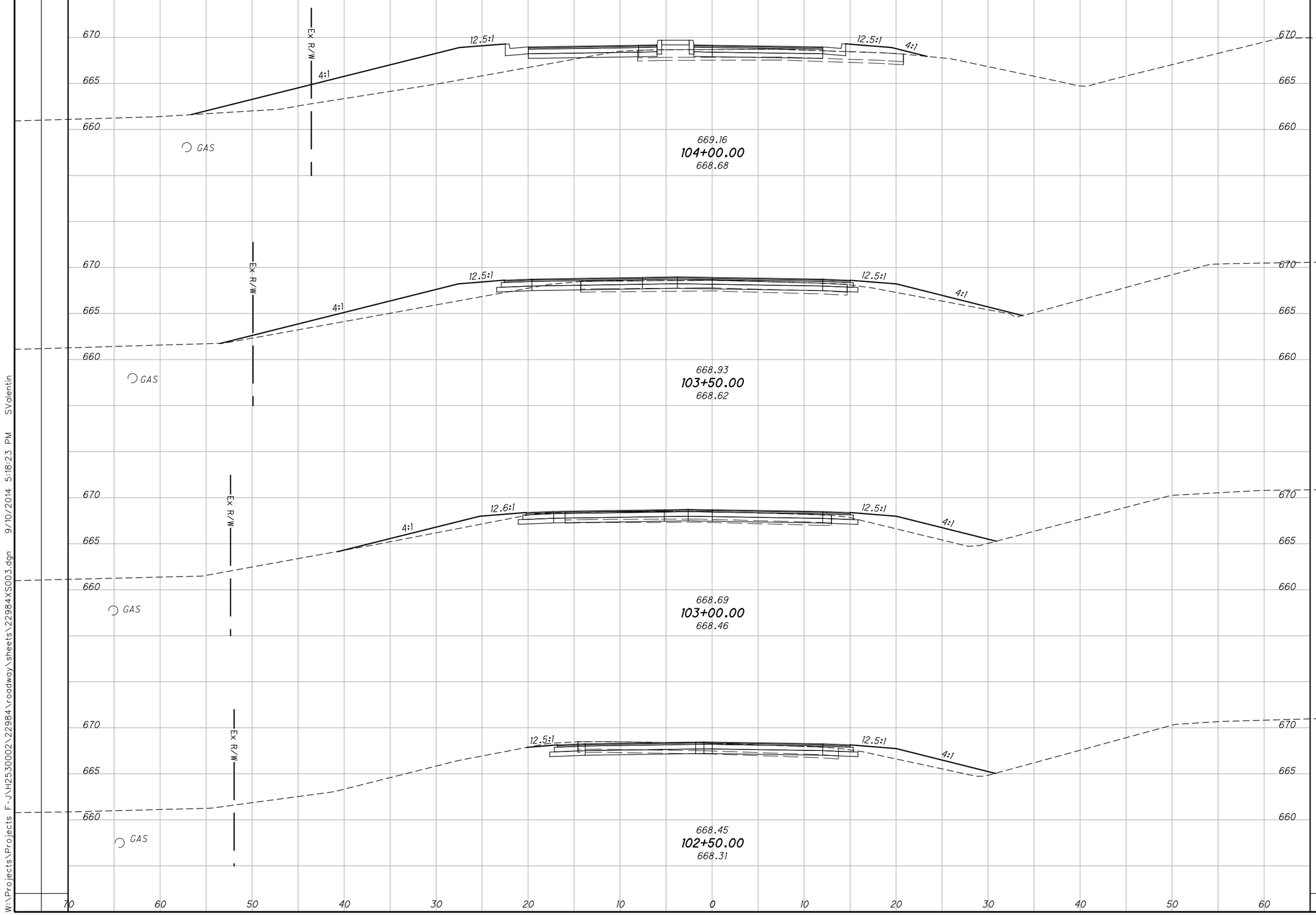

CROSS SECTIONS S.R.110
STA. 102+50.00 TO STA. 104+00.00

HEN-NEW MAUMEE RIVER BRIDGE

W:\Projects\Projects F-JNH2530002\22984\roadway\sheets\22984XS003.dgn 9/10/2014 5:18:23 PM SValentin

SEEDING	
END WIDTH	SQ. YDS.

END AREA		VOLUME	
CUT	FILL	CUT	FILL

CALCULATED

CHECKED

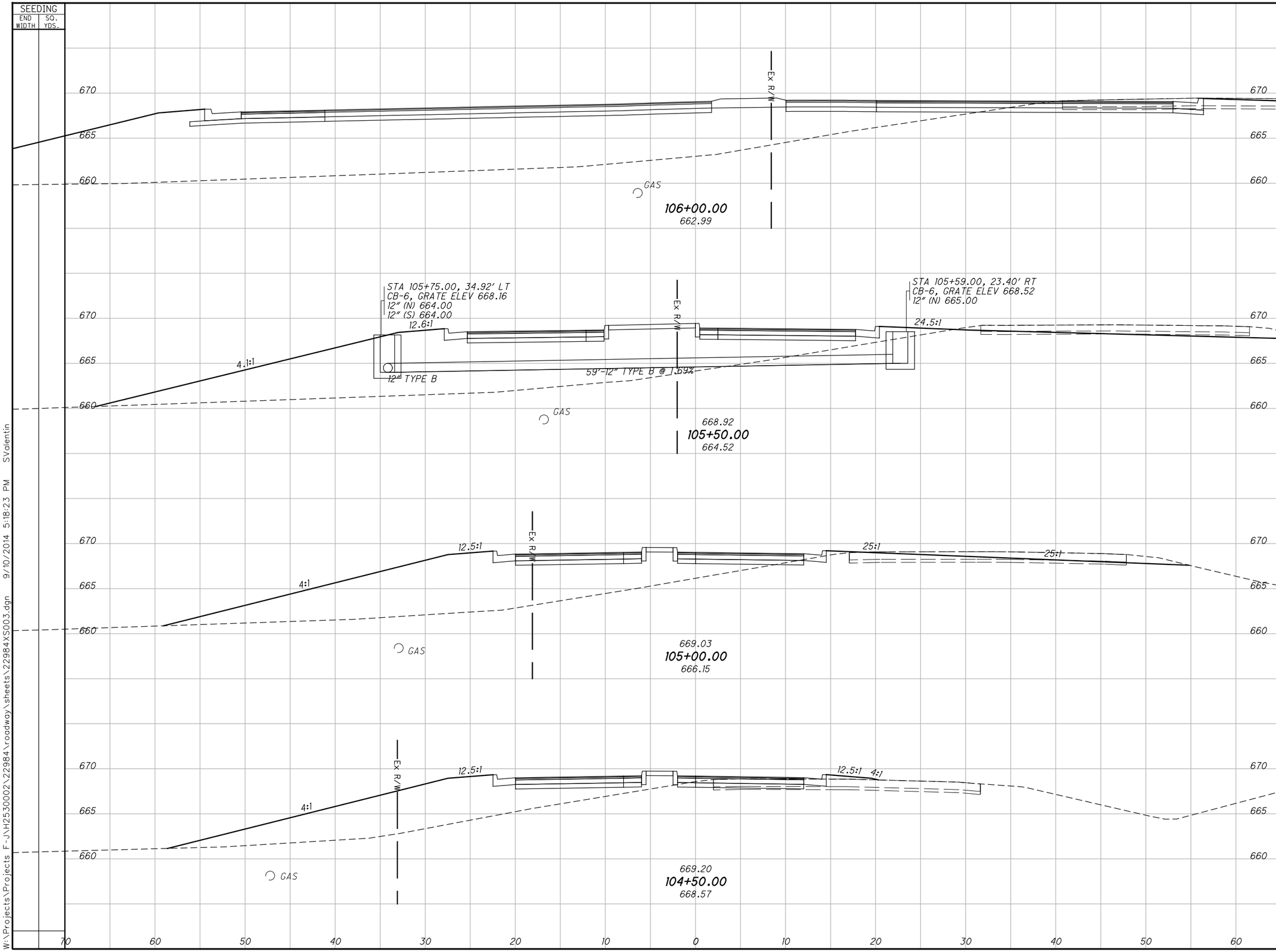

CROSS SECTIONS S.R.110
STA. 104+50.00 TO STA. 106+00.00

HEN-NEW MAUMEE RIVER BRIDGE

W:\Projects\Projects F-JNH2530002\22984\roadway\sheets\22984XS003.dgn 9/10/2014 5:18:23 PM SValentin

SEEDING	
END WIDTH	SQ. YDS.

END AREA		VOLUME	
CUT	FILL	CUT	FILL

CALCULATED

CHECKED

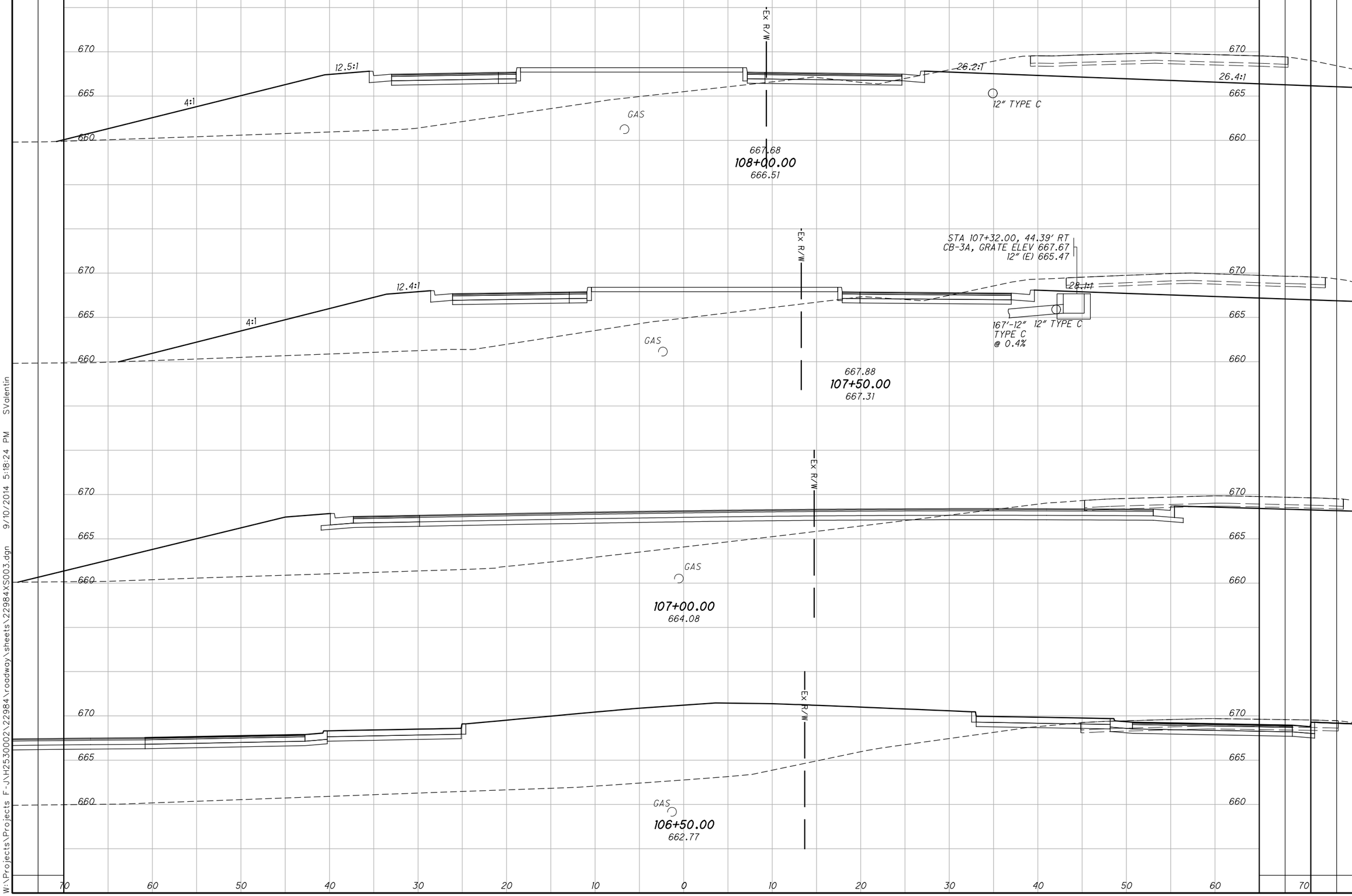

CROSS SECTIONS S.R.110
STA. 106+50.00 TO STA. 108+00.00

HEN-NEW MAUMEE RIVER BRIDGE

W:\Projects\Projects F-JVH2530002\22984\roadway\sheets\22984XS003.dgn 9/10/2014 5:18:24 PM SValentin

SEEDING	
END WIDTH	SQ. YDS.

END AREA		VOLUME	
CUT	FILL	CUT	FILL

CALCULATED

CHECKED

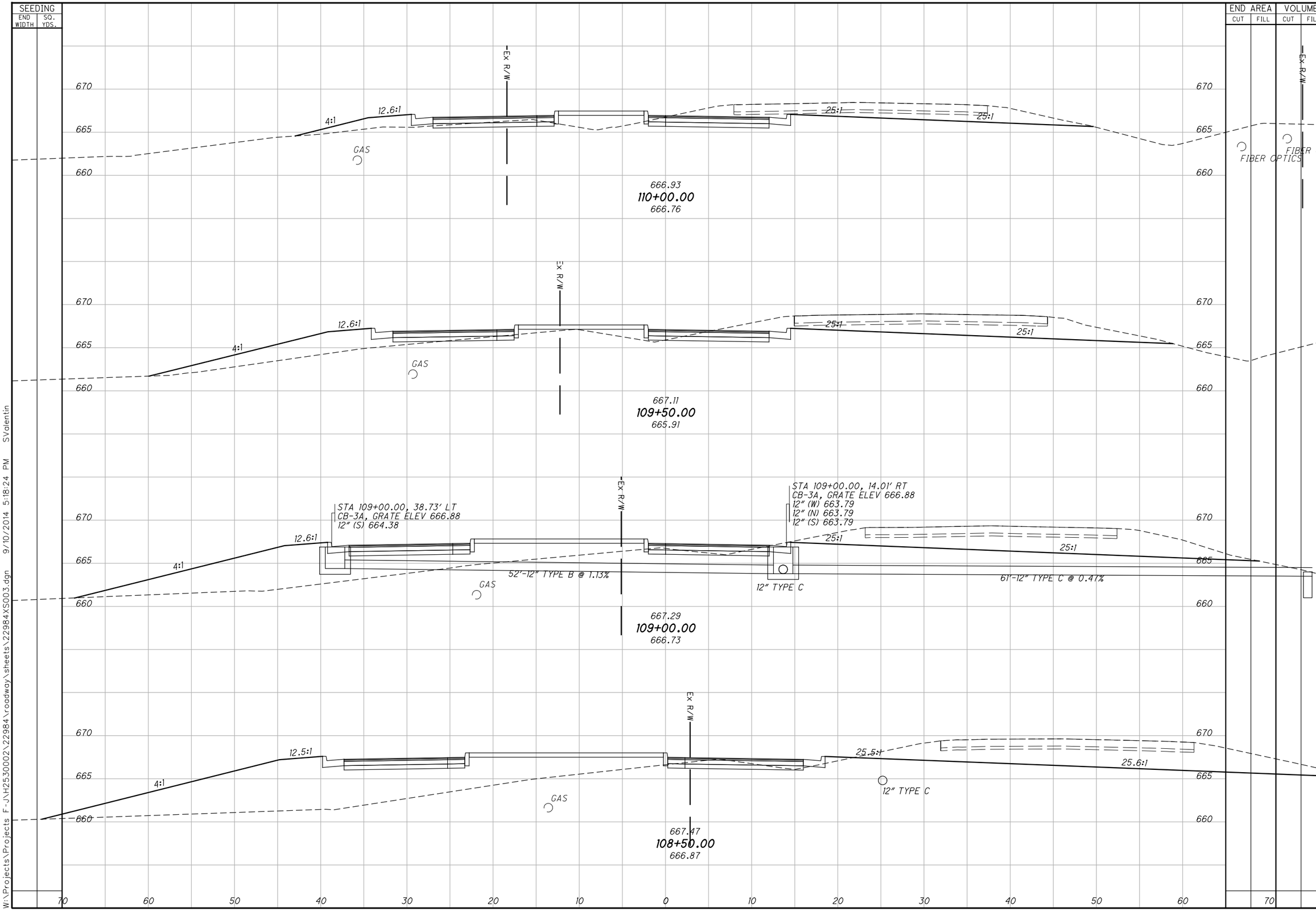

CROSS SECTIONS S.R.110
STA. 108+50.00 TO STA. 110+00.00

HEN-NEW MAUMEE RIVER BRIDGE

W:\Projects\Projects F-JNH2530002\22984\roadway\sheets\22984XS003.dgn 9/10/2014 5:18:24 PM SValentin

SEEDING	
END WIDTH	SQ. YDS.

END AREA		VOLUME	
CUT	FILL	CUT	FILL

CALCULATED

CHECKED

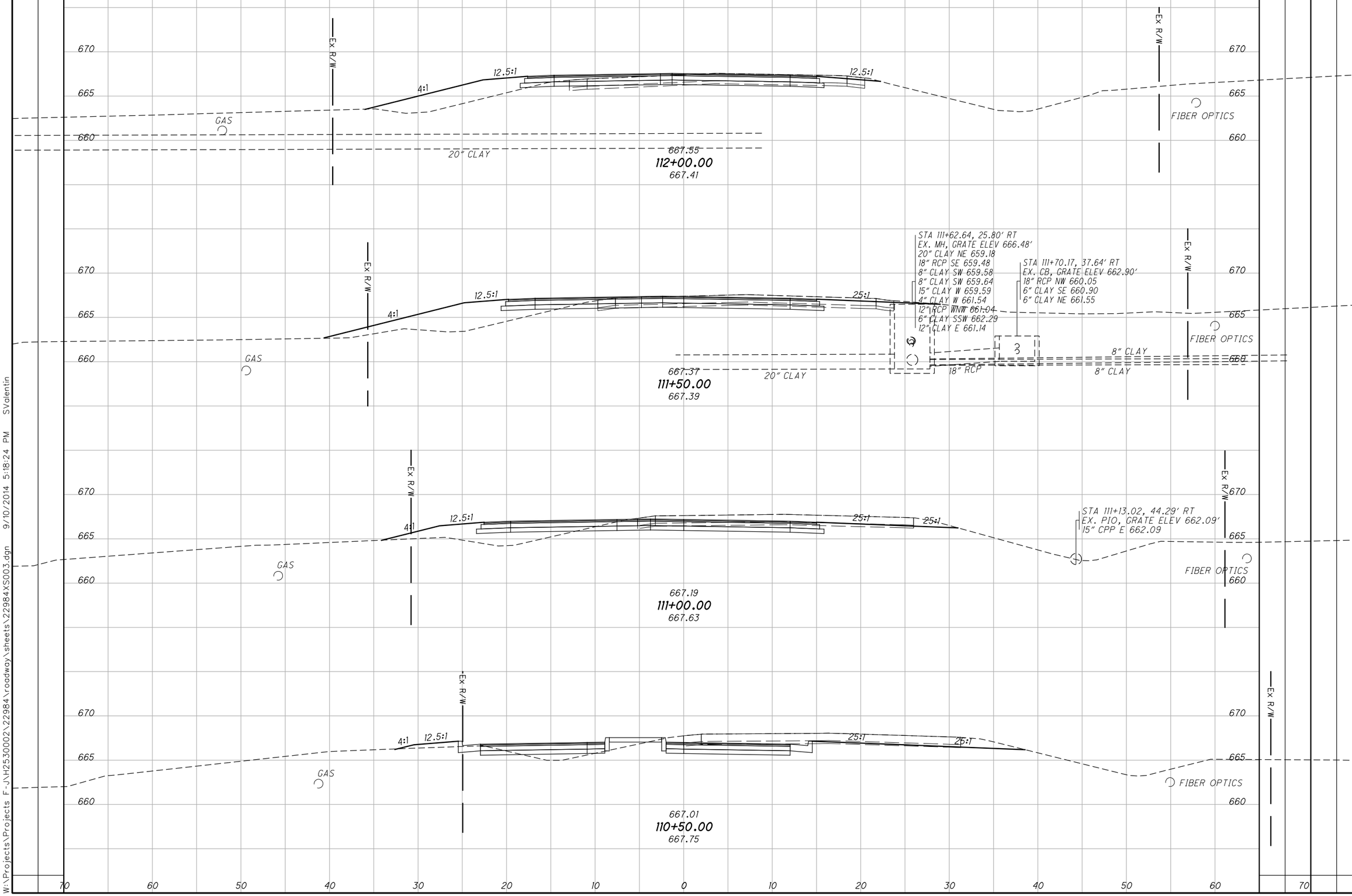

CROSS SECTIONS S.R.110
STA. 110+50.00 TO STA. 112+00.00

HEN-NEW MAUMEE RIVER BRIDGE

W:\Projects\Projects F-JNH2530002\22984\roadway\sheets\22984XS003.dgn 9/10/2014 5:18:24 PM SValentin

SEEDING	
END WIDTH	SQ. YDS.

END AREA		VOLUME	
CUT	FILL	CUT	FILL

CALCULATED

CHECKED

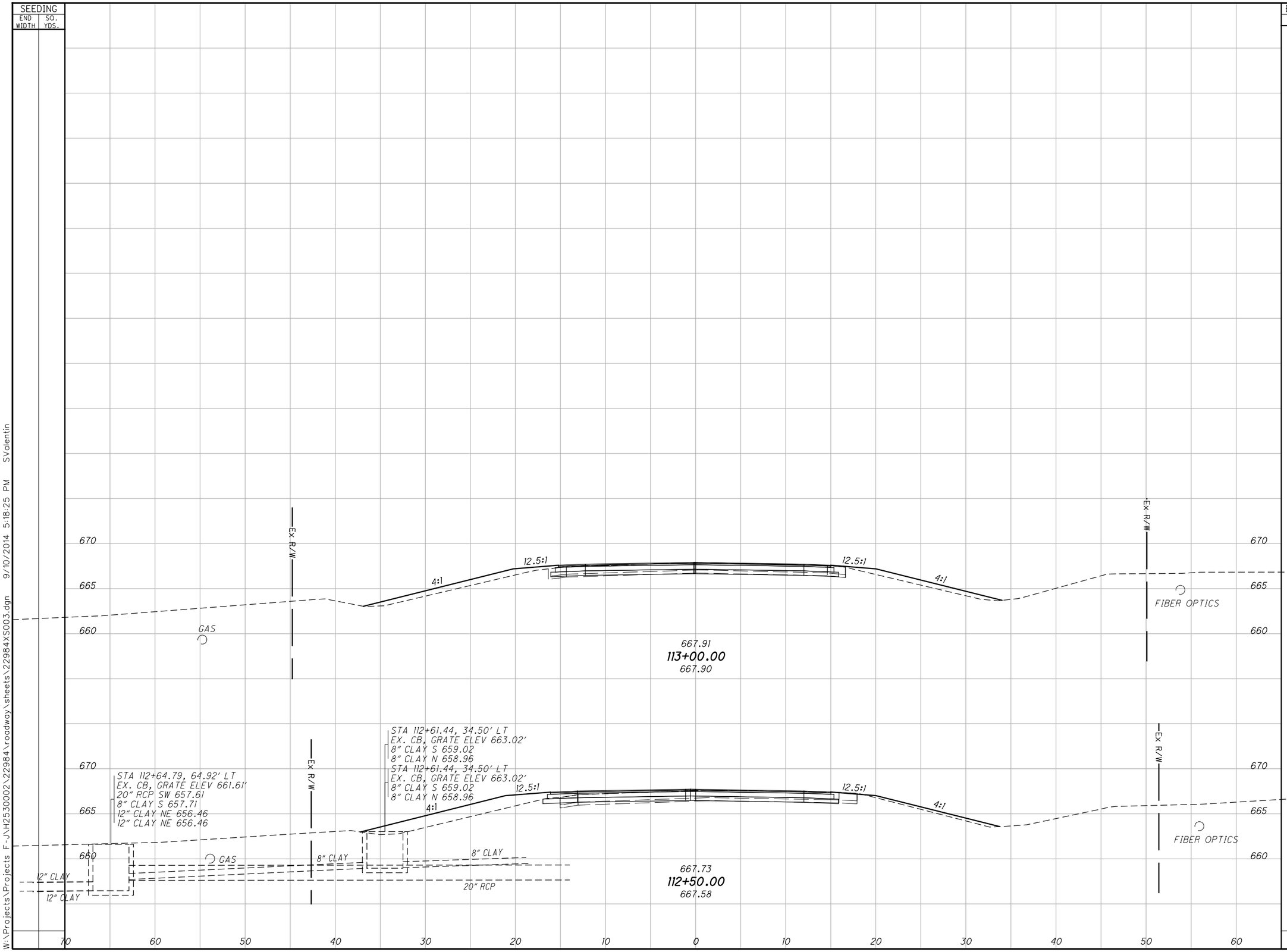

CROSS SECTIONS S.R.110
STA. 112+50.00 TO STA. 113+00.00

HEN-NEW RIVER MAUMEE BRIDGE

W:\Projects\Projects F-J\H2530002\22984\roadway\sheets\22984XS003.dgn 9/10/2014 5:18:25 PM SValentin

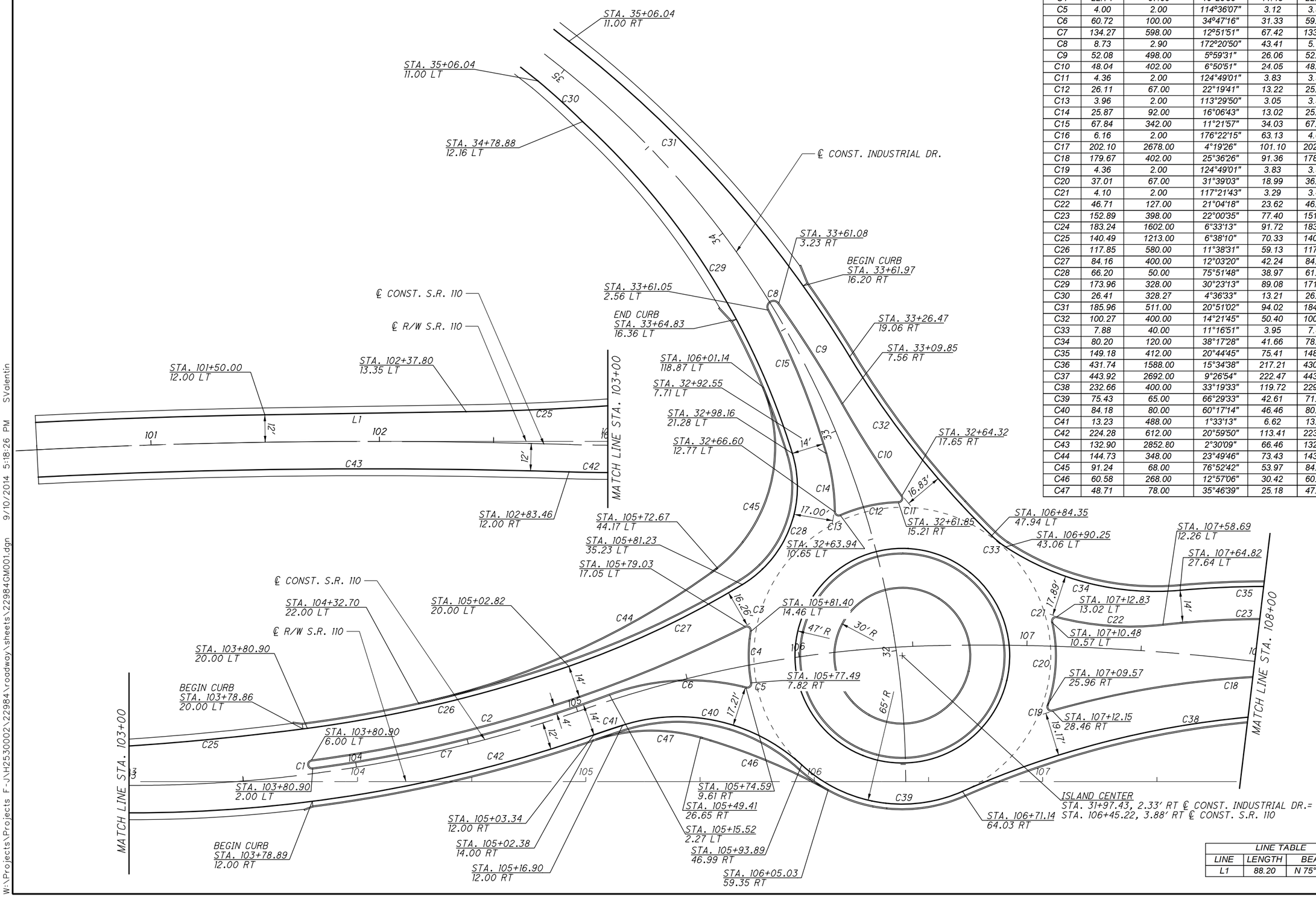

CURVE TABLE						
CURVE	LENGTH	RADIUS	DELTA	TANGENT	CHORD	CHORD BRG
C1	4.71	2.00	180°0'00"	N/A	6.28	S 20°49'23" E
C2	199.41	594.00	19°14'05"	100.65	199.41	S 59°33'34" W
C3	4.40	2.00	126°00'00"	3.93	3.56	S 67°03'28" E
C4	22.74	67.00	19°26'36"	11.48	22.63	S 13°46'47" E
C5	4.00	2.00	114°36'07"	3.12	3.37	S 33°47'58" W
C6	60.72	100.00	34°47'16"	31.33	59.79	S 73°42'24" W
C7	134.27	598.00	12°51'51"	67.42	133.98	S 62°44'41" W
C8	8.73	2.90	172°20'50"	43.41	5.79	S 45°08'07" W
C9	52.08	498.00	5°59'31"	26.06	52.06	N 45°41'42" W
C10	48.04	402.00	6°50'51"	24.05	48.02	N 46°07'22" W
C11	4.36	2.00	124°49'01"	3.83	3.54	N 12°51'43" E
C12	26.11	67.00	22°19'41"	13.22	25.94	S 64°06'23" W
C13	3.96	2.00	113°29'50"	3.05	3.35	S 70°18'32" E
C14	25.87	92.00	16°06'43"	13.02	25.79	N 21°36'59" W
C15	67.84	342.00	11°21'57"	34.03	67.73	N 35°21'19" W
C16	6.16	2.00	176°22'15"	63.13	4.00	N 6°04'48" W
C17	202.10	2678.00	4°19'26"	101.10	202.06	N 84°16'03" E
C18	179.67	402.00	25°36'26"	91.36	178.18	S 73°37'33" W
C19	4.36	2.00	124°49'01"	3.83	3.55	N 56°46'10" W
C20	37.01	67.00	31°39'03"	18.99	36.54	S 10°11'11" E
C21	4.10	2.00	117°21'43"	3.29	3.42	S 32°40'09" W
C22	46.71	127.00	21°04'18"	23.62	46.44	S 80°48'52" W
C23	152.89	398.00	22°00'35"	77.40	151.95	N 81°17'00" E
C24	183.24	1602.00	6°33'13"	91.72	183.14	S 89°00'41" W
C25	140.49	1213.00	6°38'10"	70.33	140.41	S 72°29'42" W
C26	117.85	580.00	11°38'31"	59.13	117.65	S 63°21'21" W
C27	84.16	400.00	12°03'20"	42.24	84.01	S 51°30'26" W
C28	66.20	50.00	75°51'48"	38.97	61.47	S 7°32'52" W
C29	173.96	328.00	30°23'13"	89.08	171.92	S 45°34'39" E
C30	26.41	328.27	4°36'33"	13.21	26.40	S 60°54'12" E
C31	185.96	511.00	20°51'02"	94.02	184.93	S 54°56'54" E
C32	100.27	400.00	14°21'45"	50.40	100.01	N 51°42'16" W
C33	7.88	40.00	11°16'51"	3.95	7.86	N 64°31'34" W
C34	80.20	120.00	38°17'28"	41.66	78.71	N 89°18'43" W
C35	149.18	412.00	20°44'45"	75.41	148.36	N 81°54'55" E
C36	431.74	1588.00	15°34'38"	217.21	430.41	S 84°29'58" W
C37	443.92	2692.00	9°26'54"	222.47	443.42	S 81°26'06" W
C38	232.66	400.00	33°19'33"	119.72	229.39	S 69°29'47" W
C39	75.43	65.00	66°29'33"	42.61	71.27	S 86°04'47" W
C40	84.18	80.00	60°17'14"	46.46	80.35	S 89°10'56" W
C41	13.23	488.00	1°33'13"	6.62	13.23	N 58°15'43" E
C42	224.28	612.00	20°59'50"	113.41	223.03	S 67°59'01" W
C43	132.90	2852.80	2°30'09"	66.46	132.89	N 77°08'52" E
C44	144.73	348.00	23°49'46"	73.43	143.69	S 52°18'57" W
C45	91.24	68.00	76°52'42"	53.97	84.55	N 2°34'11" E
C46	60.58	268.00	12°57'06"	30.42	60.45	N 80°51'14" W
C47	48.71	78.00	35°46'39"	25.18	47.92	S 75°27'56" W

LINE TABLE		
LINE	LENGTH	BEARING
L1	88.20	N 75°48'47" E

HORIZONTAL SCALE IN FEET
0 10 20 40

CALCULATED
CHECKED

ROUNDABOUT GEOMETRIC DETAIL
INDUSTRIAL DR. & S.R. 110

HEN-NEW MAUMEE RIVER BRIDGE

W:\Projects\Projects F-JNH2530002\22984\roadway\sheets\22984GM001.dgn 9/10/2014 5:18:26 PM SValentin

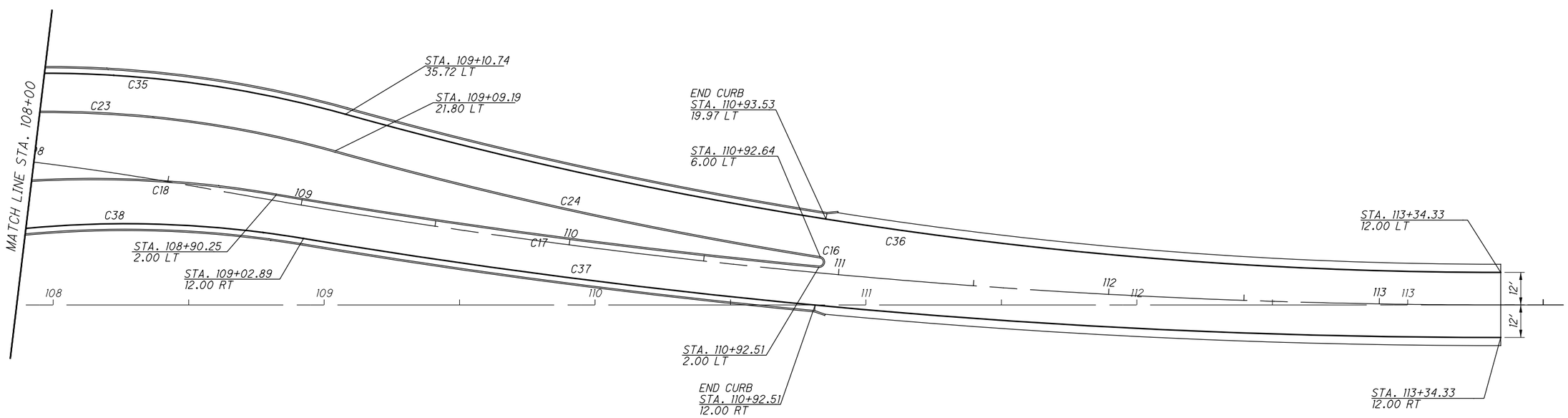

NOTE: SEE SHEET XX FOR CURVE AND LINE DATA.

HORIZONTAL SCALE IN FEET
0 10 20 40

CALCULATED
CHECKED

ROUNDABOUT GEOMETRIC DETAIL
INDUSTRIAL DR. & S.R. 110

HEN-NEW MAUMEE RIVER BRIDGE

W:\Projects\Projects F-J\H2530002\22984\roadway\sheets\22984GM002.dgn 9/10/2014 5:18:37 PM SValentin

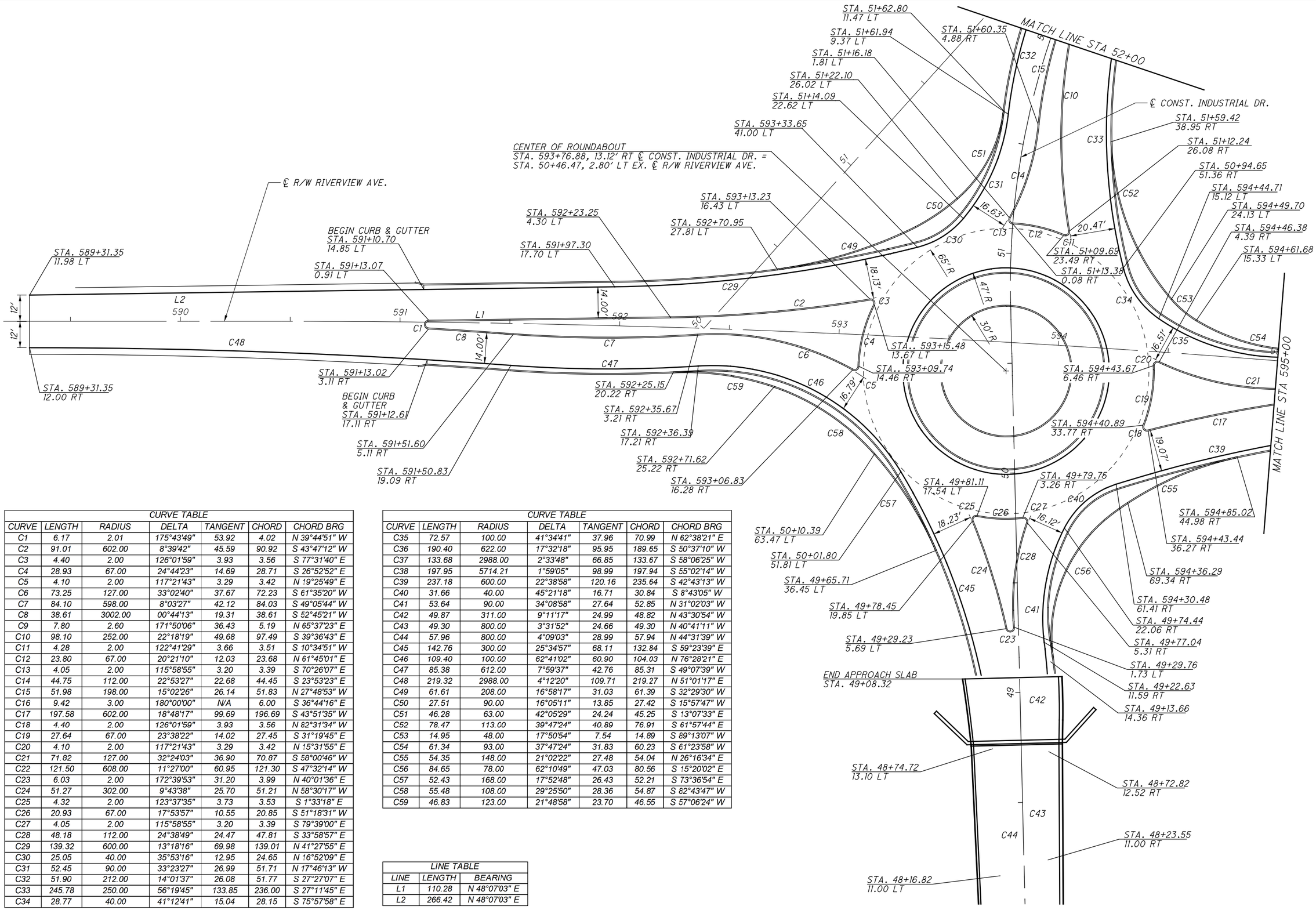

CURVE TABLE						
CURVE	LENGTH	RADIUS	DELTA	TANGENT	CHORD	CHORD BRG
C1	6.17	2.01	175°43'49"	53.92	4.02	N 39°44'51" W
C2	91.01	602.00	8°39'42"	45.59	90.92	S 43°47'12" W
C3	4.40	2.00	126°01'59"	3.93	3.56	S 77°31'40" E
C4	28.93	67.00	24°44'23"	14.69	28.71	S 26°52'52" E
C5	4.10	2.00	117°21'43"	3.29	3.42	N 19°25'49" E
C6	73.25	127.00	33°02'40"	37.67	72.23	S 61°35'20" W
C7	84.10	598.00	8°03'27"	42.12	84.03	S 49°05'44" W
C8	38.61	3002.00	00°44'13"	19.31	38.61	S 52°45'21" W
C9	7.80	2.60	171°50'06"	36.43	5.19	N 65°37'23" E
C10	98.10	252.00	22°18'19"	49.68	97.49	S 39°36'43" E
C11	4.28	2.00	122°41'29"	3.66	3.51	S 10°34'51" W
C12	23.80	67.00	20°21'10"	12.03	23.68	N 61°45'01" E
C13	4.05	2.00	115°58'55"	3.20	3.39	S 70°26'07" E
C14	44.75	112.00	22°53'27"	22.68	44.45	S 23°53'23" E
C15	51.98	198.00	15°02'26"	26.14	51.83	N 27°48'53" W
C16	9.42	3.00	180°00'00"	N/A	6.00	S 36°44'16" E
C17	197.58	602.00	18°48'17"	99.69	196.69	S 43°51'35" W
C18	4.40	2.00	126°01'59"	3.93	3.56	N 82°31'34" W
C19	27.64	67.00	23°38'22"	14.02	27.45	S 31°19'45" E
C20	4.10	2.00	117°21'43"	3.29	3.42	N 15°31'55" E
C21	71.82	127.00	32°24'03"	36.90	70.87	S 58°00'46" W
C22	121.50	608.00	11°27'00"	60.95	121.30	S 47°32'14" W
C23	6.03	2.00	172°39'53"	31.20	3.99	N 40°01'36" E
C24	51.27	302.00	9°43'38"	25.70	51.21	N 58°30'17" W
C25	4.32	2.00	123°37'35"	3.73	3.53	S 1°33'18" E
C26	20.93	67.00	17°53'57"	10.55	20.85	S 51°18'31" W
C27	4.05	2.00	115°58'55"	3.20	3.39	S 79°39'00" E
C28	48.18	112.00	24°38'49"	24.47	47.81	S 33°58'57" E
C29	139.32	600.00	13°18'16"	69.98	139.01	N 41°27'55" E
C30	25.05	40.00	35°53'16"	12.95	24.65	N 16°52'09" E
C31	52.45	90.00	33°23'27"	26.99	51.71	N 17°46'13" W
C32	51.90	212.00	14°01'37"	26.08	51.77	S 27°27'07" E
C33	245.78	250.00	56°19'45"	133.85	236.00	S 27°11'45" E
C34	28.77	40.00	41°12'41"	15.04	28.15	S 75°57'58" E

CURVE TABLE						
CURVE	LENGTH	RADIUS	DELTA	TANGENT	CHORD	CHORD BRG
C35	72.57	100.00	41°34'41"	37.96	70.99	N 62°38'21" E
C36	190.40	622.00	17°32'18"	95.95	189.65	S 50°37'10" W
C37	133.68	2988.00	2°33'48"	66.85	133.67	S 58°06'25" W
C38	197.95	5714.21	1°59'05"	98.99	197.94	S 55°02'14" W
C39	237.18	600.00	22°38'58"	120.16	235.64	S 42°43'13" W
C40	31.66	40.00	45°21'18"	16.71	30.84	S 8°43'05" W
C41	53.64	90.00	34°08'58"	27.64	52.85	N 31°02'03" W
C42	49.87	311.00	9°11'17"	24.99	48.82	N 43°30'54" W
C43	49.30	800.00	3°31'52"	24.66	49.30	N 40°41'11" W
C44	57.96	800.00	4°09'03"	28.99	57.94	N 44°31'39" W
C45	142.76	300.00	25°34'57"	68.11	132.84	S 59°23'39" E
C46	109.40	100.00	62°41'02"	60.90	104.03	N 76°28'21" E
C47	85.38	612.00	7°59'37"	42.76	85.31	S 49°07'39" W
C48	219.32	2988.00	4°12'20"	109.71	219.27	N 51°01'17" E
C49	61.61	208.00	16°58'17"	31.03	61.39	S 32°29'30" W
C50	27.51	90.00	16°05'11"	13.85	27.42	S 15°57'47" W
C51	46.28	63.00	42°05'29"	24.24	45.25	S 13°07'33" E
C52	78.47	113.00	39°47'24"	40.89	76.91	S 61°57'44" E
C53	14.95	48.00	17°50'54"	7.54	14.89	S 89°13'07" W
C54	61.34	93.00	37°47'24"	31.83	60.23	S 61°23'58" W
C55	54.35	148.00	21°02'22"	27.48	54.04	N 26°16'34" E
C56	84.65	78.00	62°10'49"	47.03	80.56	S 15°20'02" E
C57	52.43	168.00	17°52'48"	26.43	52.21	S 73°36'54" E
C58	55.48	108.00	29°25'50"	28.36	54.87	S 62°43'47" W
C59	46.83	123.00	21°48'58"	23.70	46.55	S 57°06'24" W

LINE TABLE		
LINE	LENGTH	BEARING
L1	110.28	N 48°07'03" E
L2	266.42	N 48°07'03" E

HORIZONTAL SCALE IN FEET
0 10 20 40

CALCULATED
CHECKED

ROUNDABOUT GEOMETRIC DETAIL
INDUSTRIAL DR. & RIVERVIEW AVE.

HEN-NEW MAUMEE RIVER BRIDGE

W:\Projects\Projects F-J\H25300\22984\roadway\sheets\22984GM003.dgn 9/10/2014 5:18:38 PM SVdentin

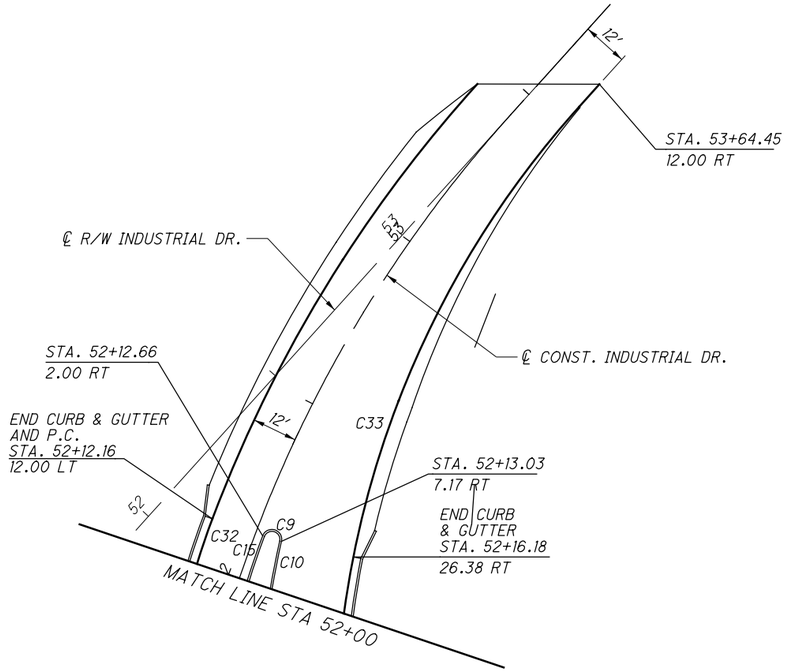

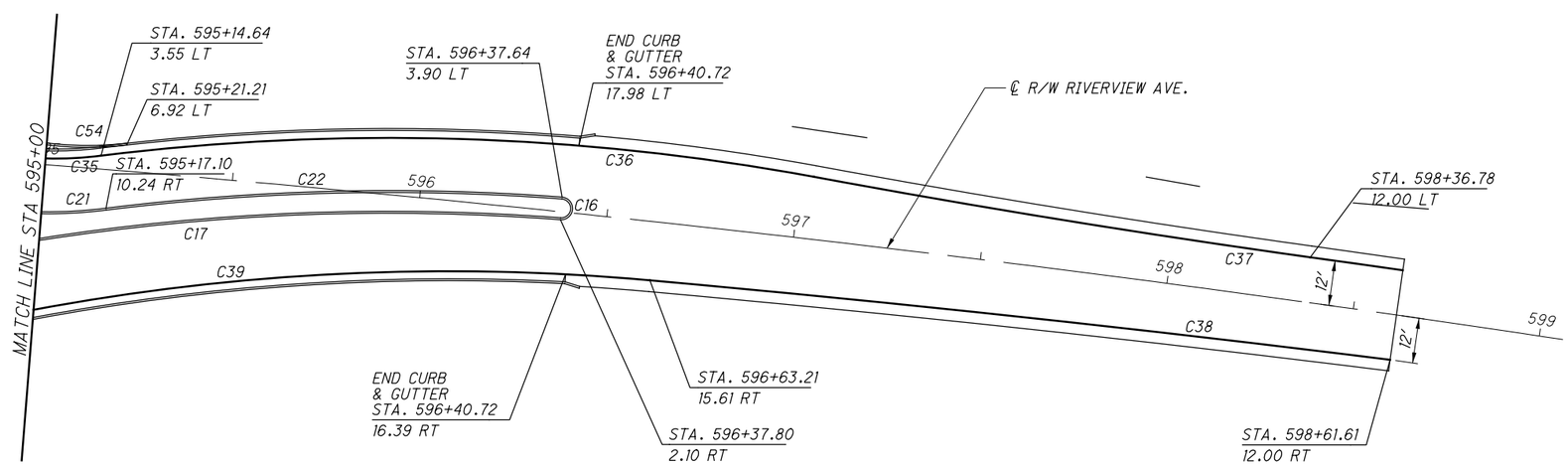

NOTE: SEE SHEET XX FOR CURB AND LINE DATA

HORIZONTAL SCALE IN FEET
0 10 20 40

CALCULATED
CHECKED

ROUNDABOUT GEOMETRIC DETAIL
INDUSTRIAL DR. & RIVERVIEW AVE.

HEN-NEW MAUMEE RIVER BRIDGE

W:\Projects\Projects F-JNH2530002\22984\roadway\sheets\22984GM004.dgn 9/10/2014 5:18:42 PM SVdentin

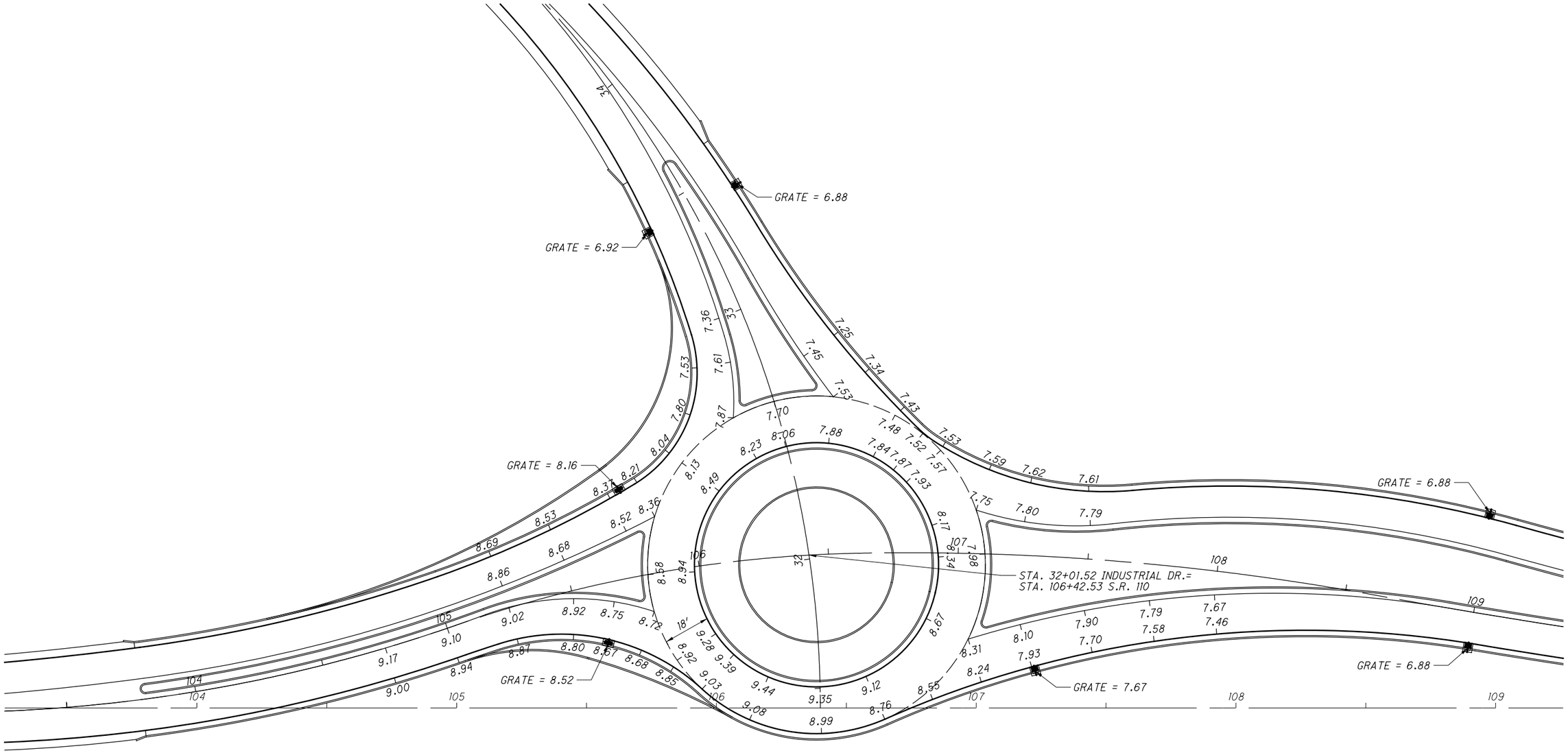

NOTES:

ADD 660 TO ALL ELEVATIONS
FOR TYPICAL SECTIONS, SEE SHEET **
SEE ROUNDABOUT GEOMETRIC PLAN FOR CURVE DATA

HORIZONTAL SCALE IN FEET
0 10 20 40

CALCULATED
CHECKED

ROUNDABOUT GRADING DETAIL
INDUSTRIAL DR. & S.R. 110

HEN-NEW MAUMEE RIVER BRIDGE

W:\Projects\Projects F-JVH2530002\22984\roadway\sheets\229846G001.dgn 9/10/2014 5:18:43 PM SValentin

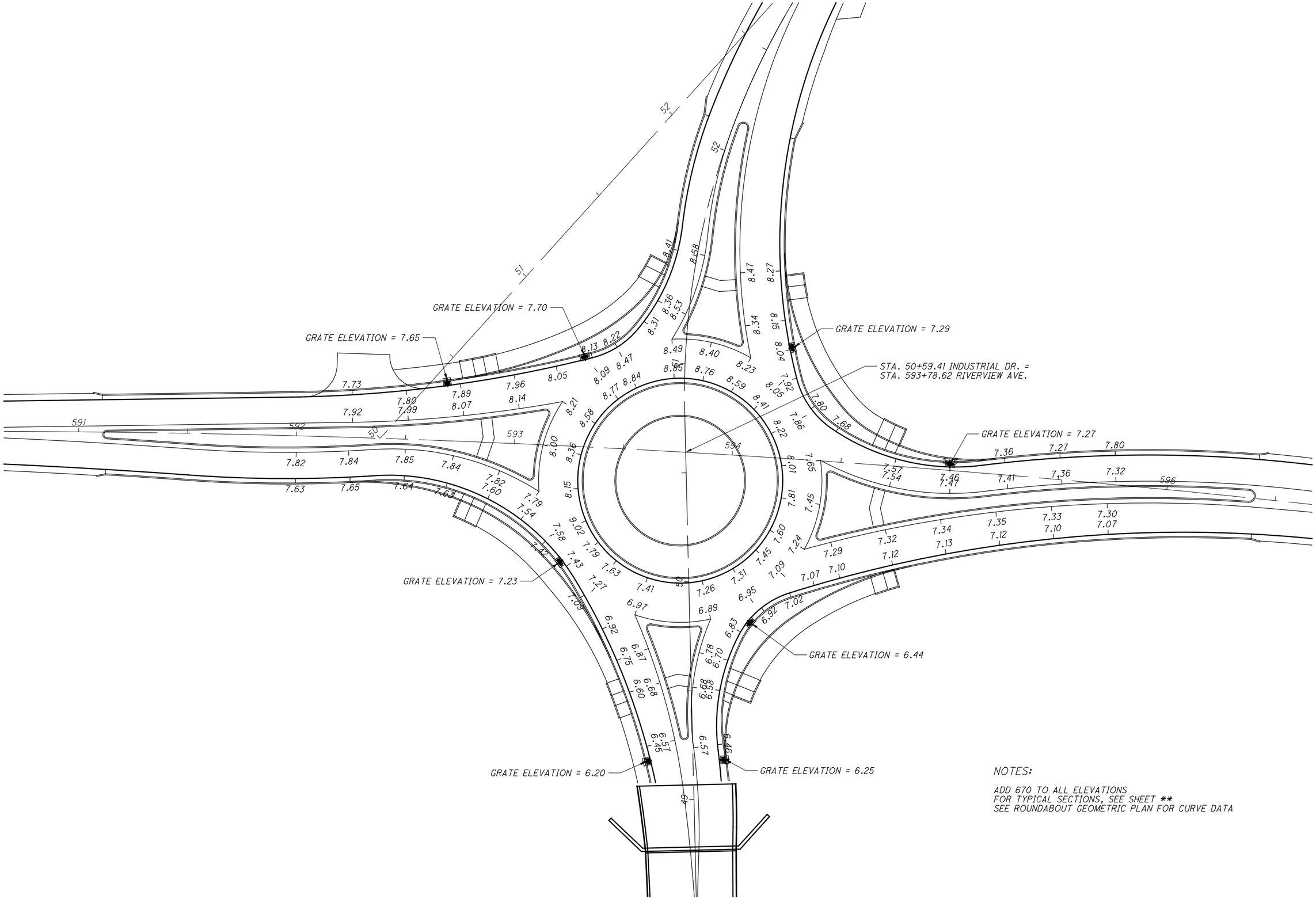

NOTES:

ADD 670 TO ALL ELEVATIONS
FOR TYPICAL SECTIONS, SEE SHEET **
SEE ROUNDABOUT GEOMETRIC PLAN FOR CURVE DATA

HORIZONTAL SCALE IN FEET
0 10 20 40

CALCULATED
CHECKED

ROUNDABOUT GRADING DETAIL
INDUSTRIAL DR. & RIVERVIEW AVE.

HEN-NEW MAUMEE RIVER BRIDGE

W:\Projects\Projects F-J\H2530002\22984\roadway\sheets\22984GI003.dgn 9/10/2014 5:18:43 PM SValentin

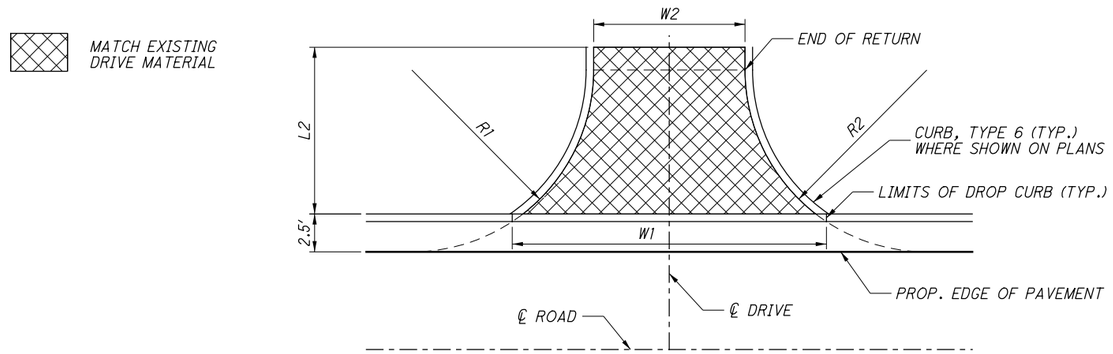

DRIVE PLAN DETAIL
WITHOUT WALK

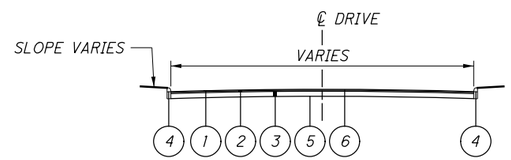

1. ITEM 441 1½" ASPHALT CONCRETE SURFACE COURSE, TYPE 1, (448) (DRIVEWAYS)
2. ITEM 441 1¾" ASPHALT CONCRETE INTERMEDIATE COURSE, TYPE 2, (448) (DRIVEWAYS)
3. ITEM 304 8" AGGREGATE BASE
4. ITEM 609 CURB, TYPE 6
5. ITEM 204, SUBGRADE COMPACTION
6. ITEM 690, SPECIAL-MISC.: TRACKLESS TACK COAT (0.04 GAL./SY. YD.)

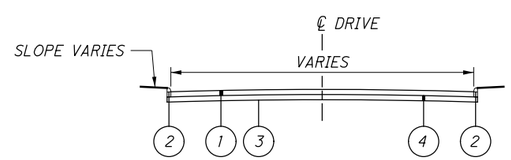

1. ITEM 452 8" NON-REINFORCED CONCRETE PAVEMENT
2. ITEM 609 CURB, TYPE 6
3. ITEM 204 SUBGRADE COMPACTION
4. ITEM 304 6" AGGREGATE BASE

CALCULATED
CHECKED

DRIVE DETAILS

HEN-NEW MAUMEE RIVER BRIDGE

W:\Projects\Projects F-J\H25300\22984\roadway\sheets\22984GD001.dgn 9/10/2014 5:18:44 PM SValentin

SEEDING	
END WIDTH	SQ. YDS.

END AREA		VOLUME	
CUT	FILL	CUT	FILL

CALCULATED

CHECKED

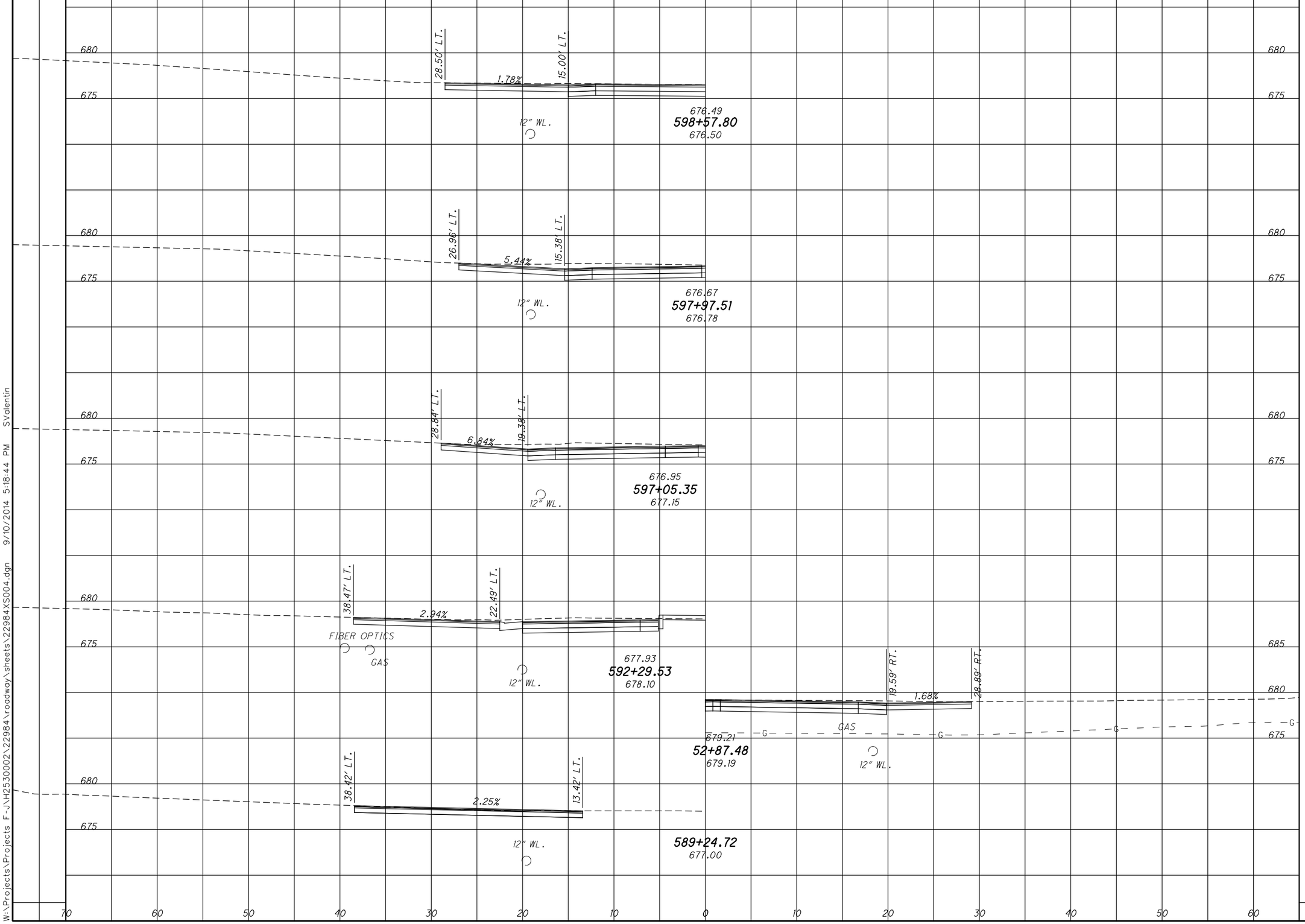

W:\Projects\Projects F-J\H2530002\22984\roadway\sheets\22984XS004.dgn 9/10/2014 5:18:44 PM SVolentin

DRIVEWAY PROFILES
INDUSTRIAL DR.

HEN-NEW MAUMEE RIVER BRIDGE

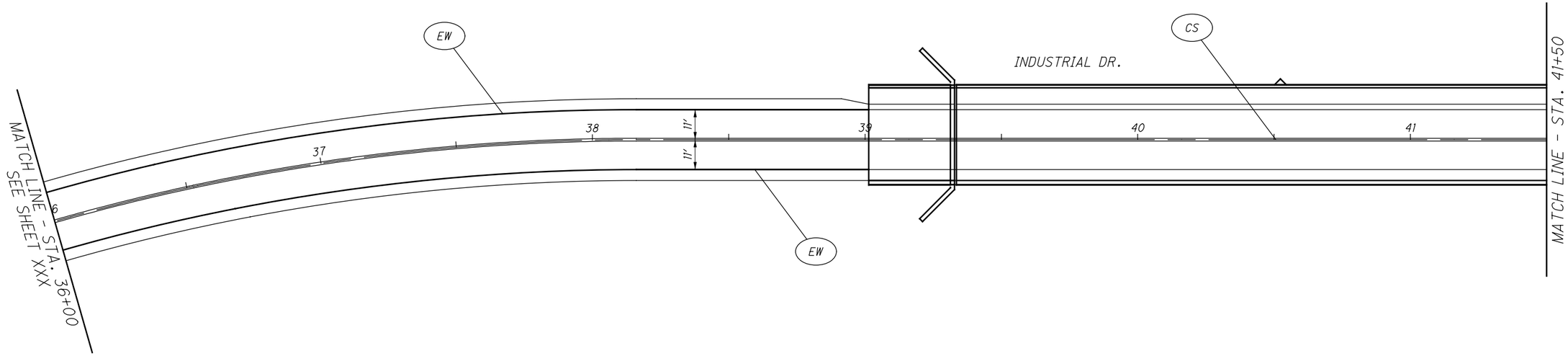

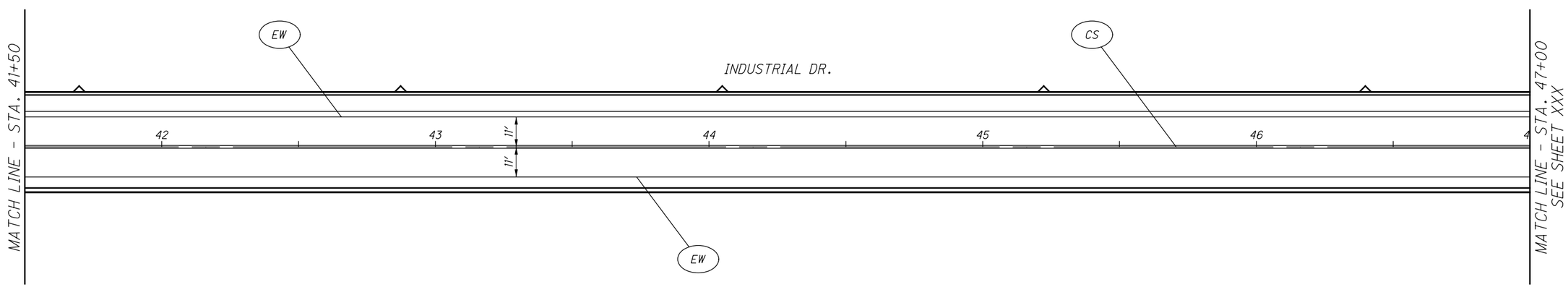

0 10 20 40
HORIZONTAL SCALE IN FEET

CALCULATED
CHECKED

PAVEMENT MARKING PLAN
INDUSTRIAL DR.

HEN-INDUSTRIAL DR.

W:\Projects\Projects F-J\H25300002\22984\traffic\sheets\22984TP002.dgn 9/10/2014 5:18:45 PM SValentin

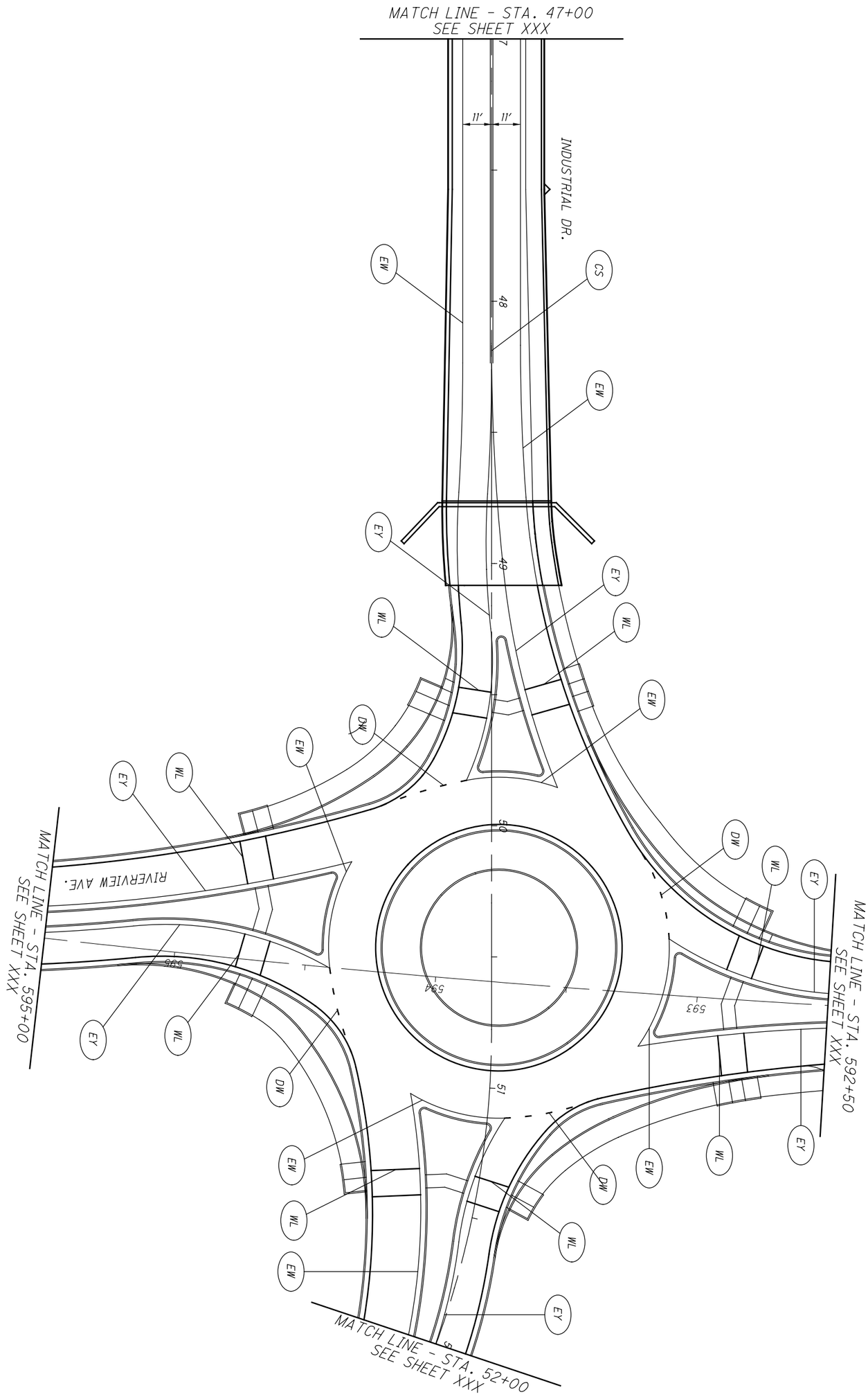

59 / 50	HEN-INDUSTRIAL DR.	PAVEMENT MARKING PLAN INDUSTRIAL DR.	CALCULATED CHECKED	0 HORIZONTAL SCALE IN FEET

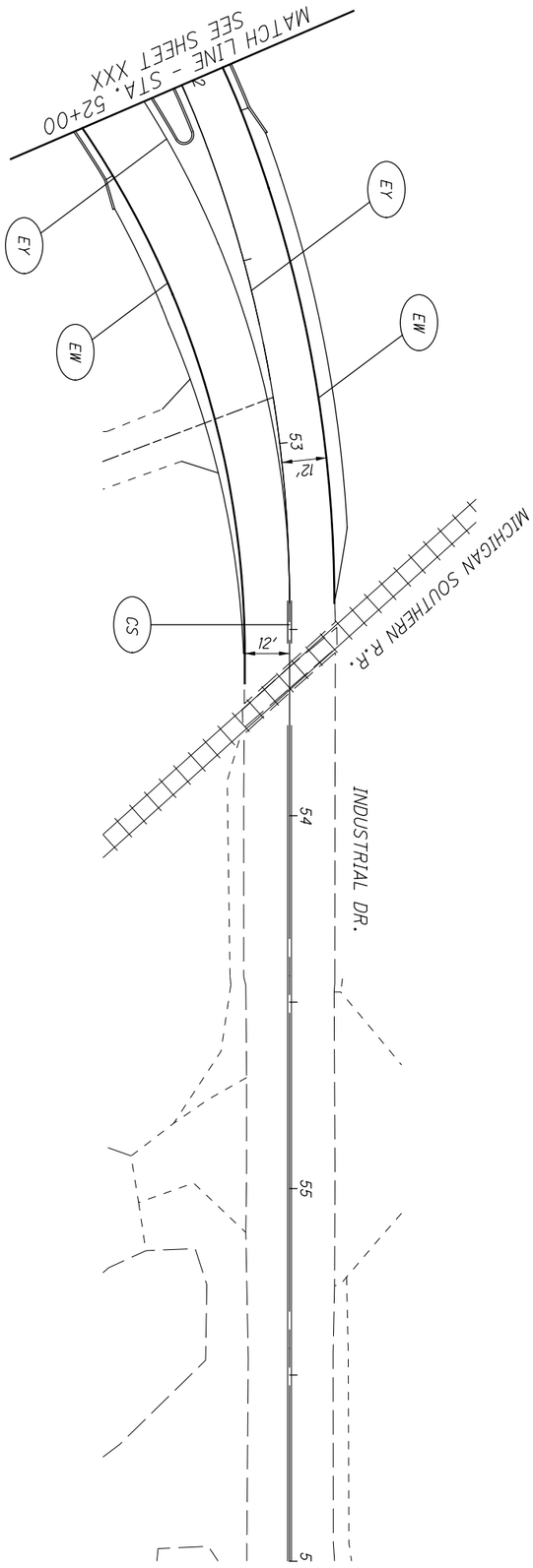

59 / 59	HEN-INDUSTRIAL DR.	PAVEMENT MARKING PLAN INDUSTRIAL DR.	CALCULATED CHECKED	0 10 20 40 HORIZONTAL SCALE IN FEET

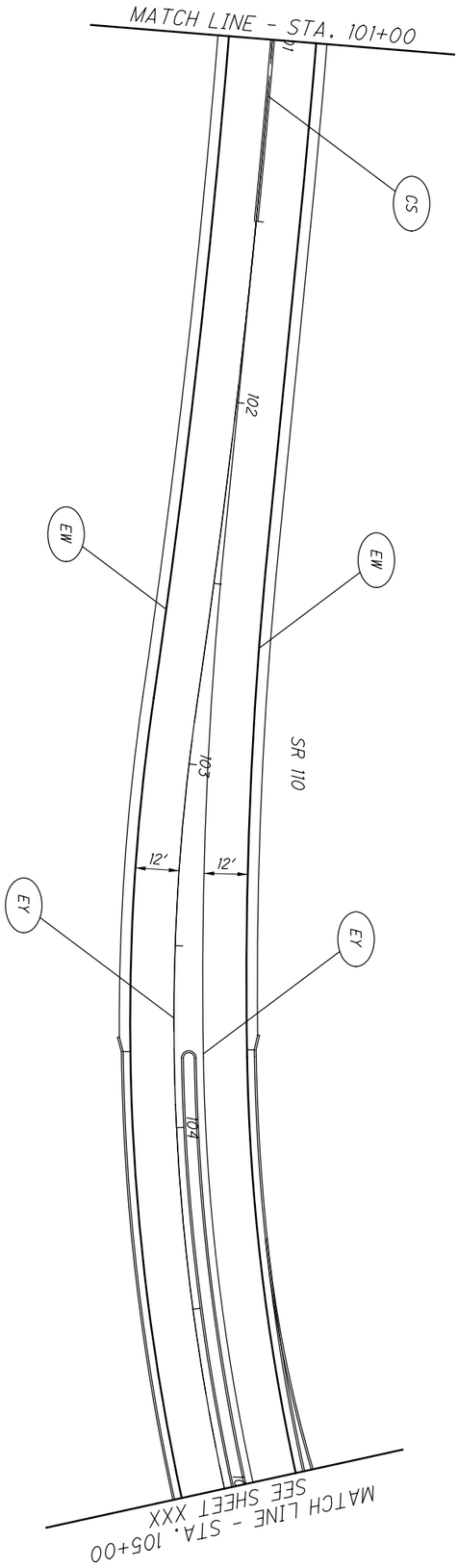

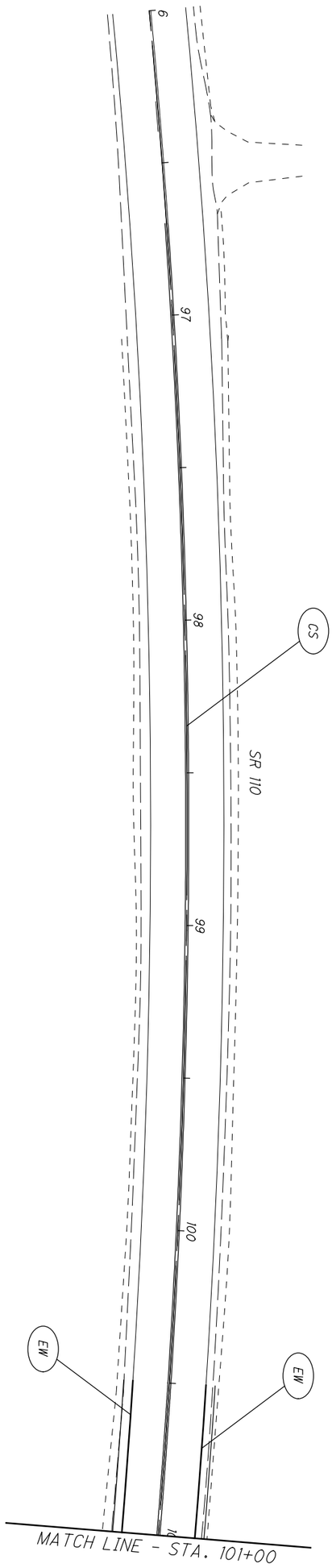

52 / 59	HEN-INDUSTRIAL DR.	PAVEMENT MARKING PLAN SR 110	CALCULATED CHECKED	0 20 10 40 HORIZONTAL SCALE IN FEET

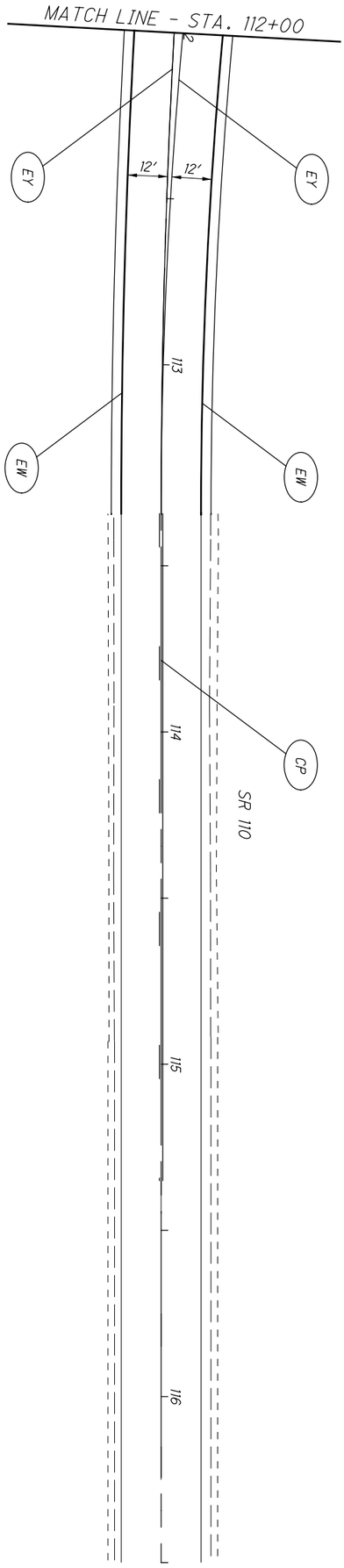

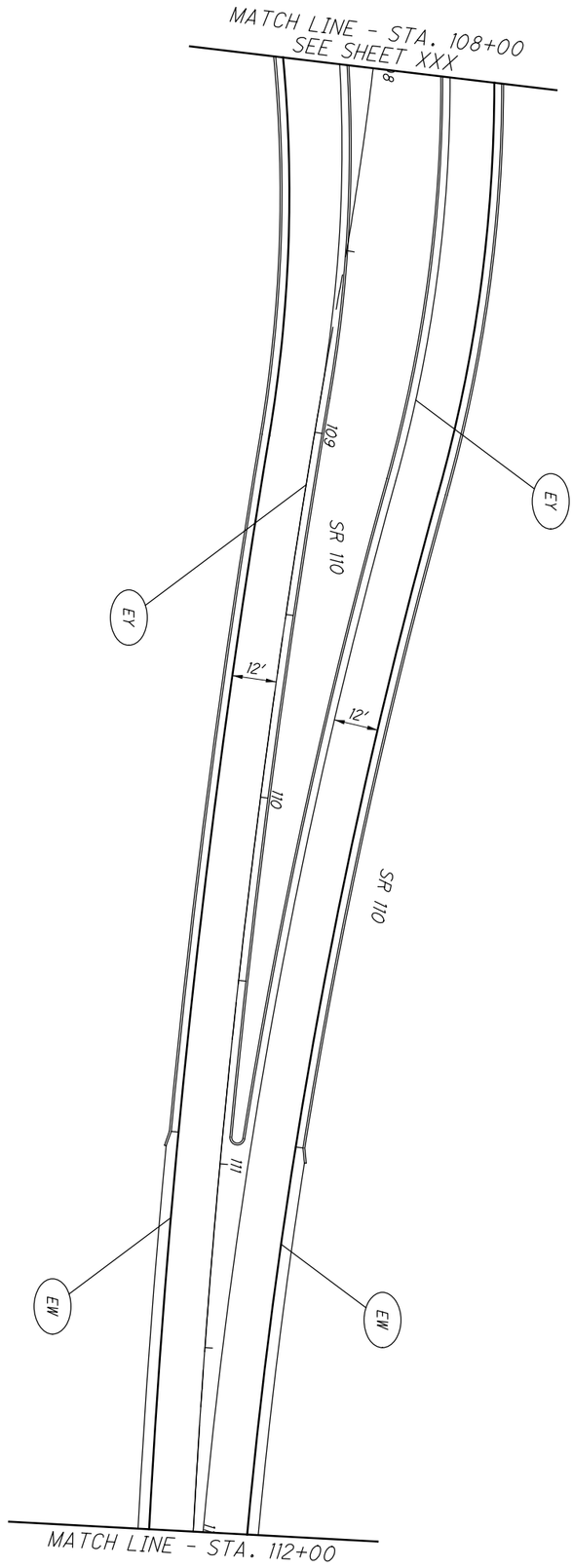

53 / 56	HEN-INDUSTRIAL DR.	PAVEMENT MARKING PLAN SR 110	CALCULATED CHECKED	0 20 10 40 HORIZONTAL SCALE IN FEET

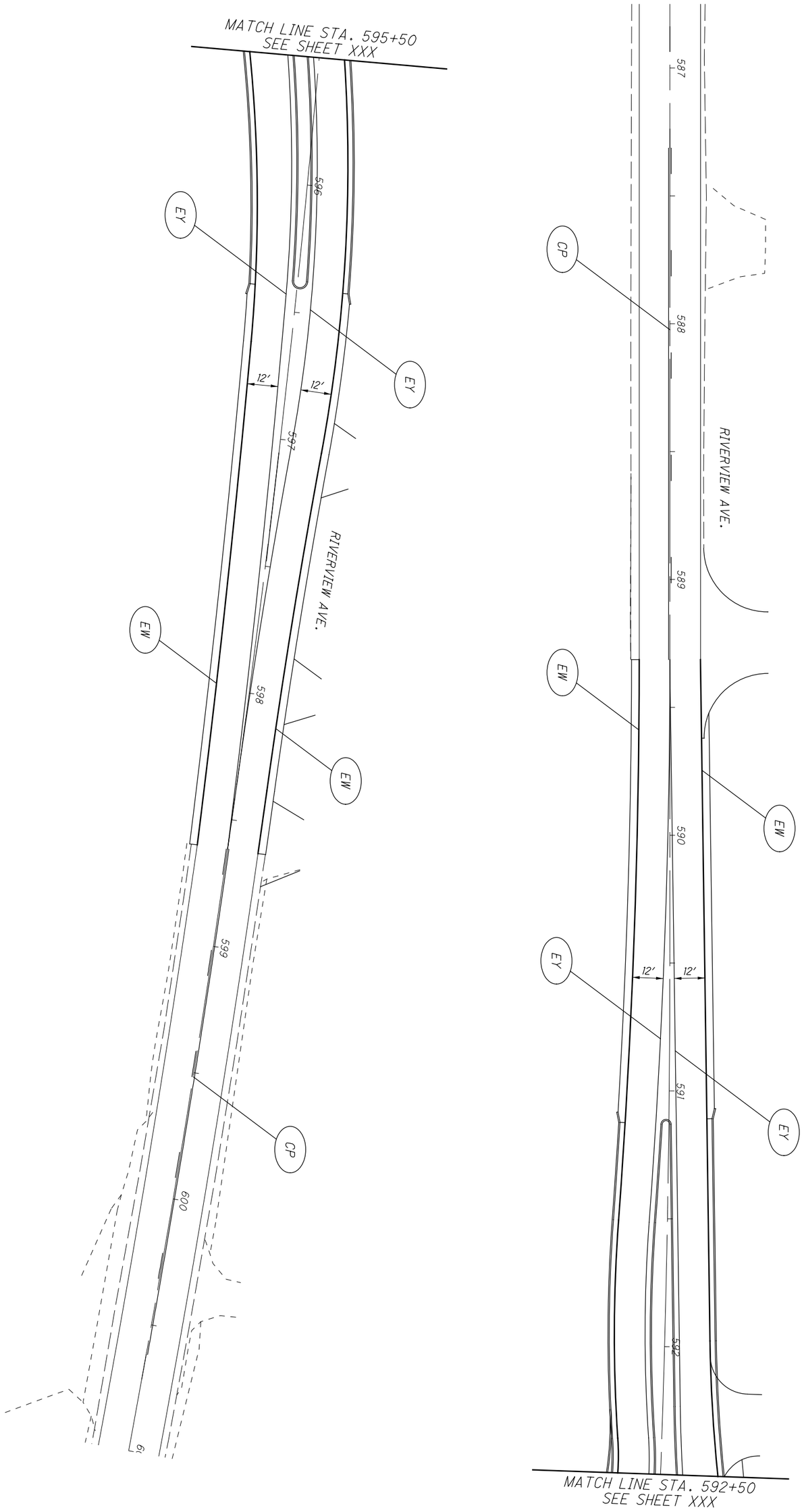

59 / 54	HEN-INDUSTRIAL DR.	PAVEMENT MARKING PLAN RIVERVIEW AVE.	CALCULATED CHECKED	0 10 20 40 HORIZONTAL SCALE IN FEET

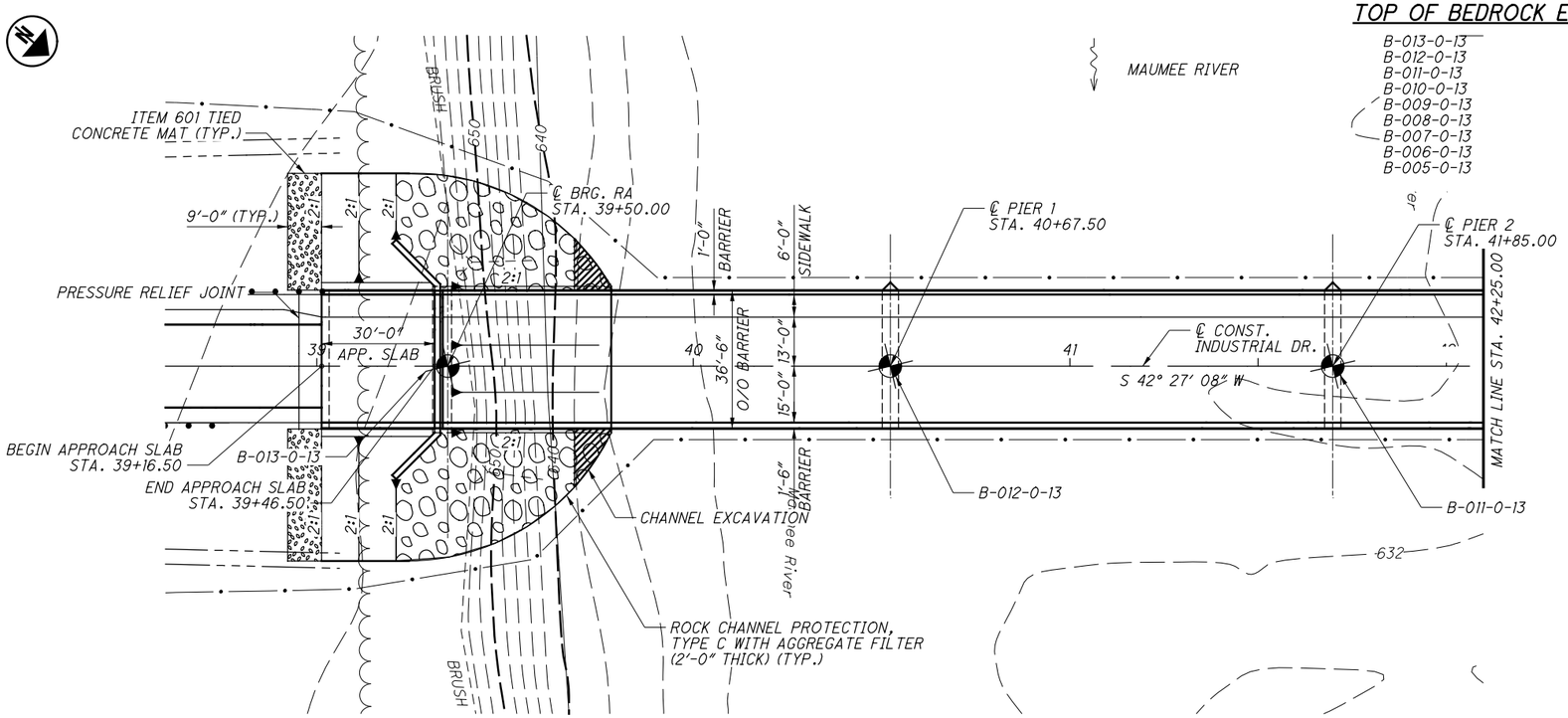

PART PLAN

TOP OF BEDROCK ELEVATIONS

B-013-0-13
B-012-0-13
B-011-0-13
B-010-0-13
B-009-0-13
B-008-0-13
B-007-0-13
B-006-0-13
B-005-0-13

BENCHMARK DATA

BM #1 STA.	, ELEV.	, OFFSET	,
BM #2 STA.	, ELEV.	, OFFSET	,
BM #3 STA.	, ELEV.	, OFFSET	,
BM #4 STA.	, ELEV.	, OFFSET	,

NOTES

1. EARTHWORK LIMITS SHOWN ARE APPROXIMATE. ACTUAL SLOPES SHALL CONFORM TO PLAN CROSS SECTIONS.
2. FOR BENCHMARK DESCRIPTIONS SEE ROADWAY PLANS

DESIGN TRAFFIC:
2015 ADT = 7660 2015 ADTT = 690
2015 ADT = 9860 2035 ADTT = 890
DIRECTIONAL DISTRIBUTION = 0.55

LEGEND

BORING LOCATION
CHANNEL EXCAVATION

HYDRAULIC DATA

DRAINAGE AREA = 5650 SQ. MILES
Q (25) = 87780 CFS V (25) = 5.00 FT/S
Q (100) = 110100 CFS V (100) = 5.49 FT/S
STRUCTURE CLEARS THE 25 YEAR DESIGN HW BY 8.48 FEET.

ESTIMATED PILE PAY LENGTH

REAR ABUTMENT (HP12X53) =
FORWARD ABUTMENT (HP12X53) =

ESTIMATED DRILLED SHAFT PAY LENGTH

48"ϕ =

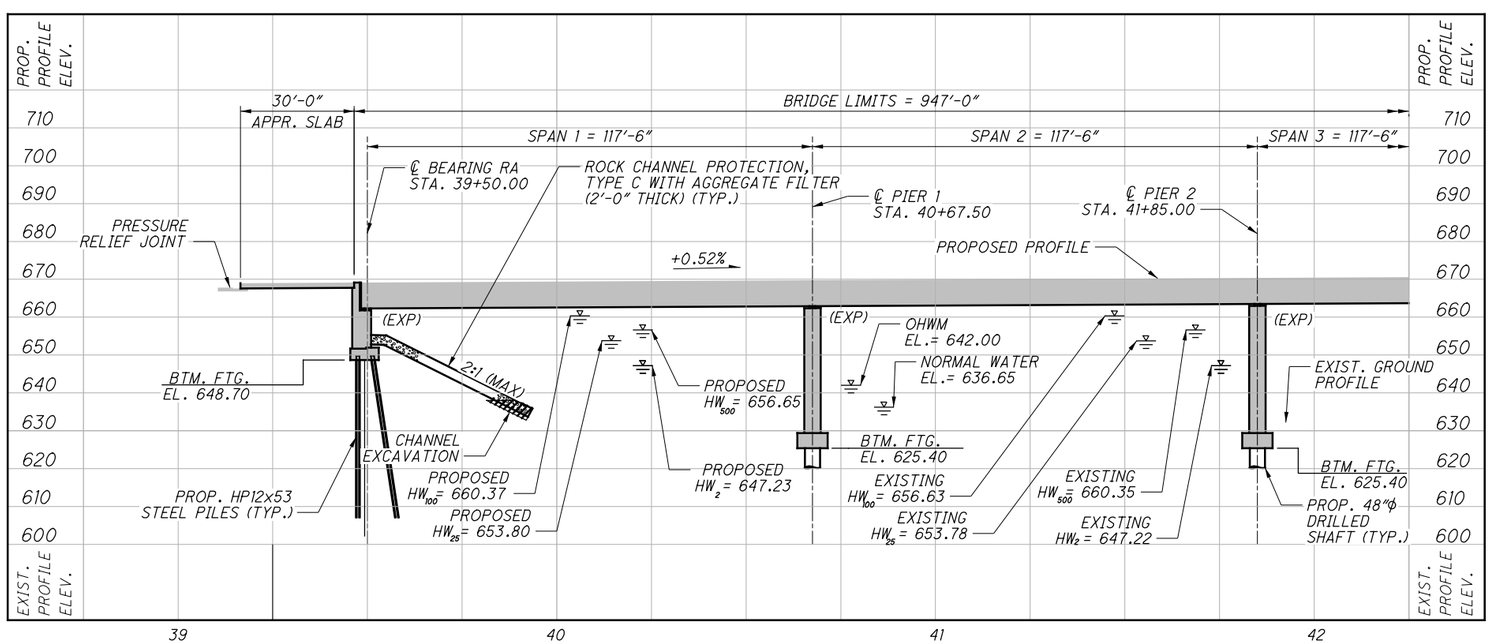

PART PROFILE ALONG ℄ CONST. INDUSTRIAL DRIVE

PROPOSED STRUCTURE

TYPE: EIGHT SPAN COMPOSITE PRESTRESSED I-BEAM SUPERSTRUCTURE WITH REINFORCED CONCRETE DECK SUPPORTED BY REINFORCED CONCRETE ABUTMENTS AND PIERS WITH SLOPED EMBANKMENTS

SPANS: 117'-6", 117'-6", 117'-6", 117'-6", 117'-6", 117'-6", 117'-6", 117'-6"

ROADWAY: VARIABLE WIDTH 34'-0" MIN. TO 38'-10" MAX. TOE/TOE BARRIER WITH 6'-0" SIDEWALK (LEFT SIDE)

LOADING: HL-93 W/60 PSF FUTURE WEARING SURFACE

SKEW: NONE

APPROACH SLABS: 30'-0" LONG (AS-1-81)

ALIGNMENT: TANGENT

CROWN: 0.016 FT/FT

COORDINATES: LATITUDE N 41° 24' 16"
LONGITUDE W 84° 06' 11"

Mannik Smith GROUP
1800 INDIAN WOOD CIRCLE
MAUMEE, OHIO 43537

DESIGNED	DRAWN	REVIEWED	DATE
KRH	AMK	BWP	04/2014
CHECKED	REVISED	STRUCTURE FILE NUMBER	
SCT			

HENRY COUNTY
STA. 39+46.50
STA. 48+93.50

SITE PLAN (ALT. C)
HEN-IND-0000
INDUSTRIAL DRIVE OVER MAUMEE RIVER

HEN-IND-0000
PID No. 22984

W:\Projects\Projects F-JNH2530002\22984\structures\HENIND_0000\Sheets\IND_0000CSP003A.DGN 9/10/2014 5:18:49 PM SVdentin

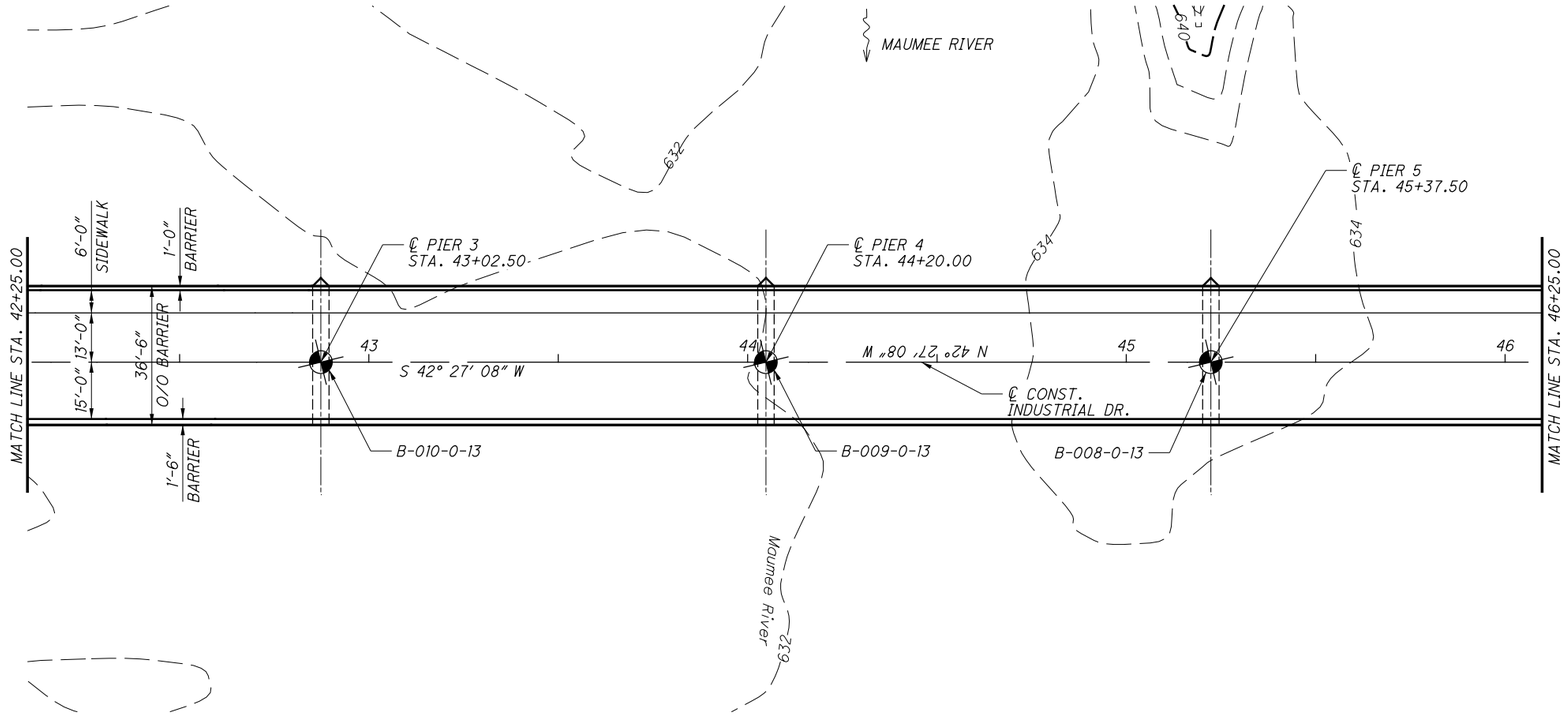

PART PLAN

NOTES

1. FOR PLAN NOTES AND LEGEND SEE SHEET XX/XX

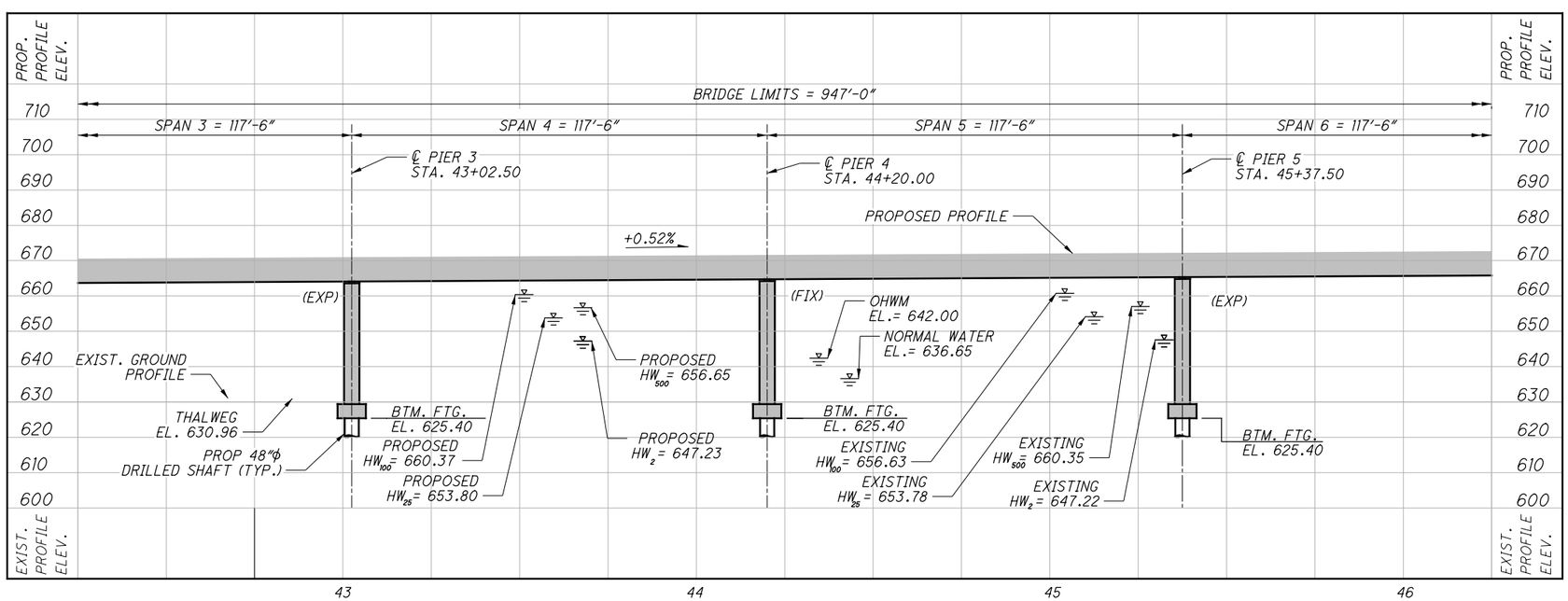

PART PROFILE ALONG ℄ CONST. INDUSTRIAL DRIVE

Mannik Smith GROUP
1800 INDIAN WOOD CIRCLE
MAUMEE, OHIO 43537

DESIGNED	DRAWN	REVIEWED	DATE
KRH	AMK		
CHECKED	REVISED	STRUCTURE FILE NUMBER	
SCT			

HENRY COUNTY
STA. 39+46.50
STA. 48+93.50

SITE PLAN (ALT. C)
HEN-IND-0000
INDUSTRIAL DRIVE OVER MAUMEE RIVER

HEN-IND-0000
PID No. 22984

W:\Projects\Projects F-J\H2530002\22984\structures\HENIND_0000\Sheets\IND_0000CSP003B.DGN 9/10/2014 5:18:51 PM SValentin

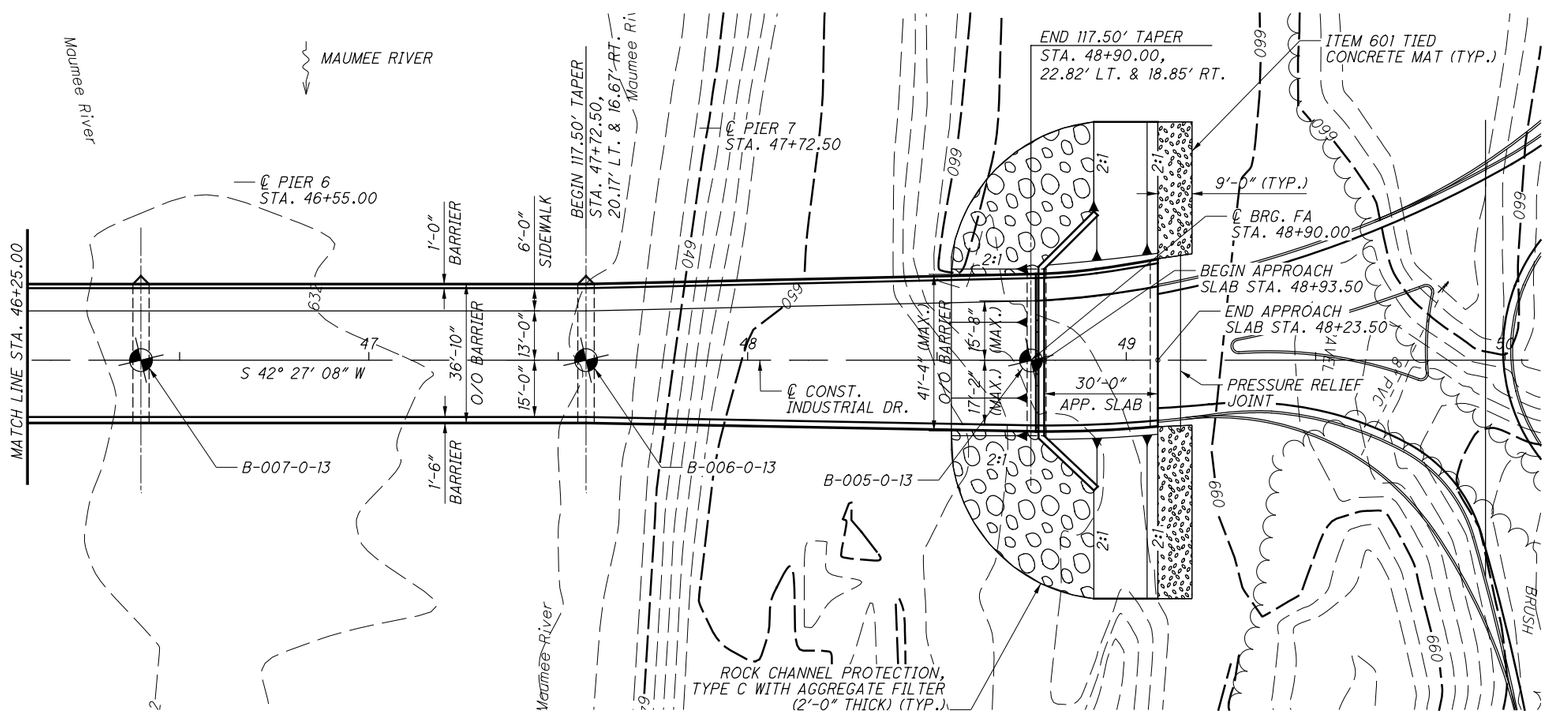

PART PLAN

NOTES

1. FOR PLAN NOTES AND LEGEND SEE SHEET XX/XX

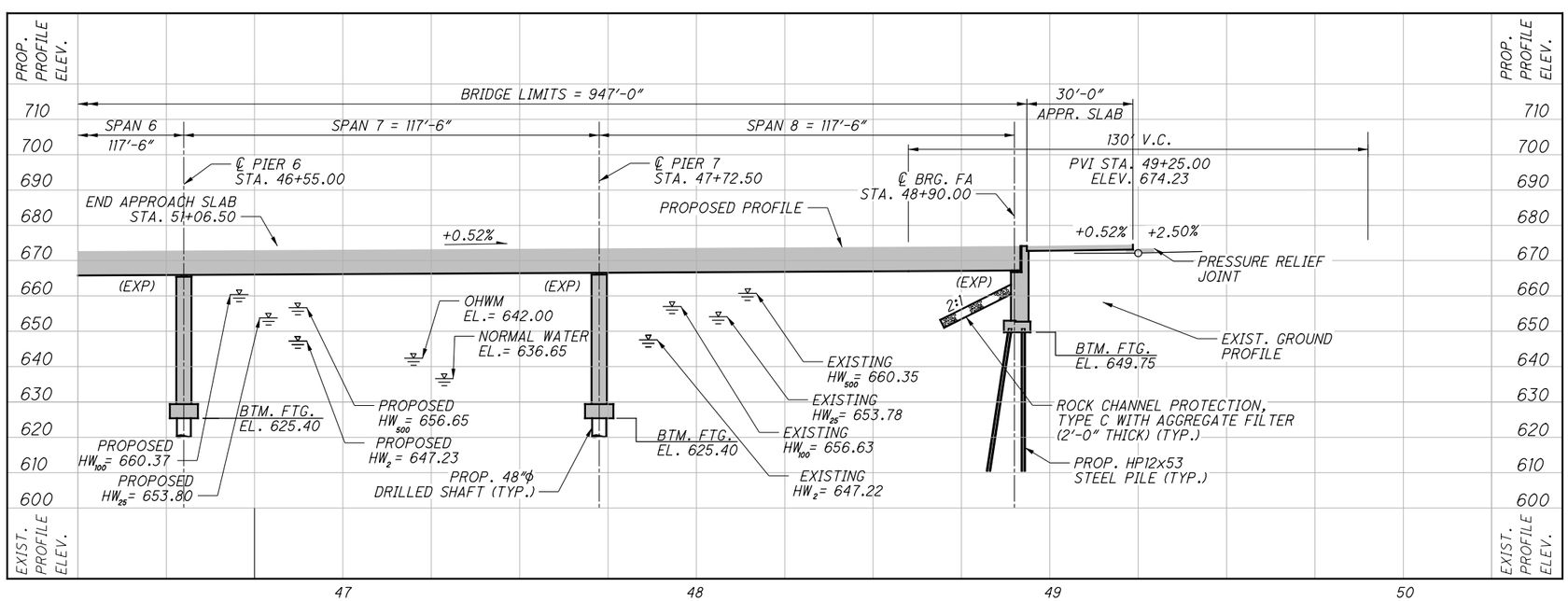

PART PROFILE ALONG ℄ CONST. INDUSTRIAL DRIVE

W:\Projects\Projects F-J\H2530002\22984\structures\HENIND_0000\Sheets\IND_0000CSP003C.DGN 9/10/2014 5:18:52 PM SValentin

Mannik Smith GROUP
1800 INDIAN WOOD CIRCLE
MAUMEE, OHIO 43537

DESIGNED	DRAWN	REVIEWED	DATE
KRH	AMK	BWP	04/2014
CHECKED	REVISED	STRUCTURE FILE NUMBER	
SCT			

HENRY COUNTY
STA. 39+46.50
STA. 48+93.50

SITE PLAN (ALT. C)
HEN-IND-0000
INDUSTRIAL DRIVE OVER MAUMEE RIVER

HEN-IND-0000
PID No. 22984

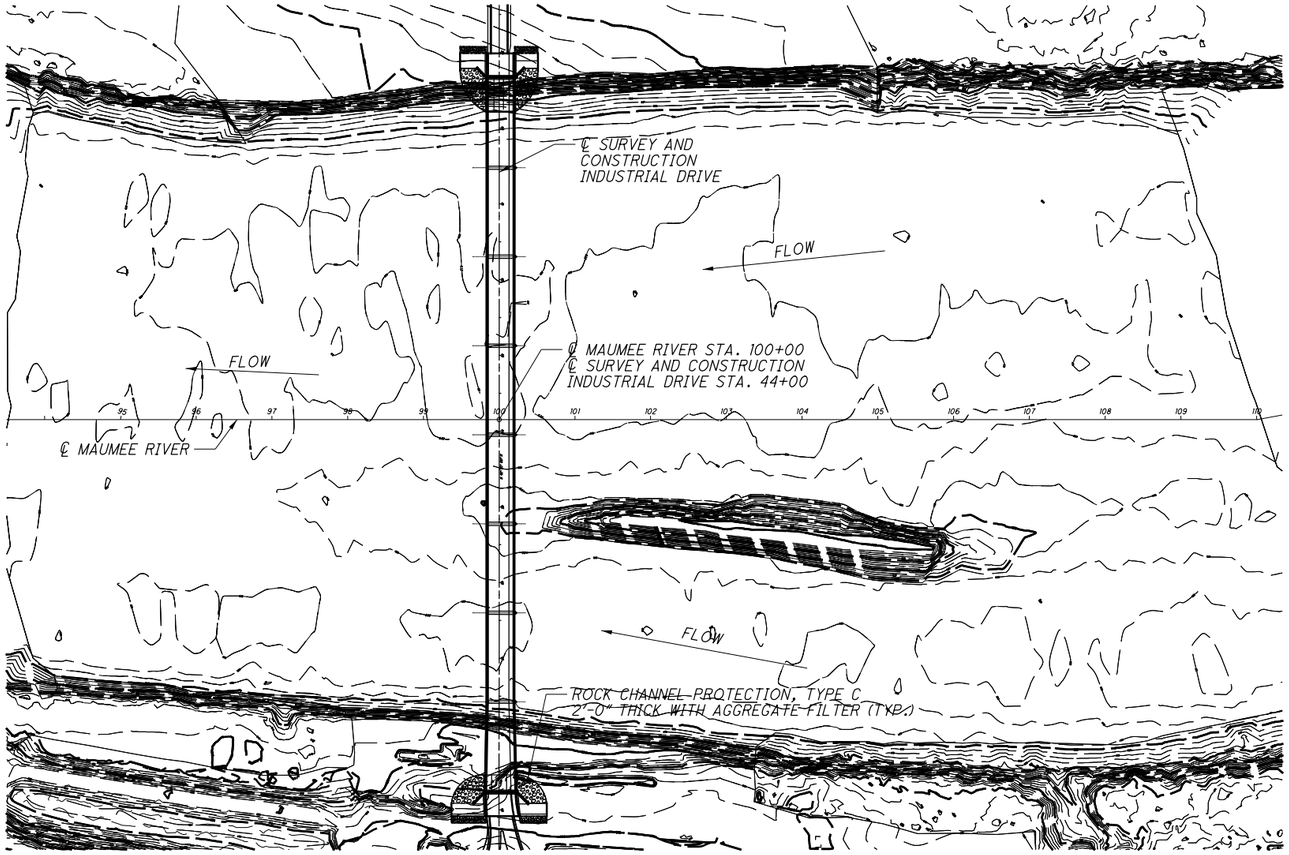

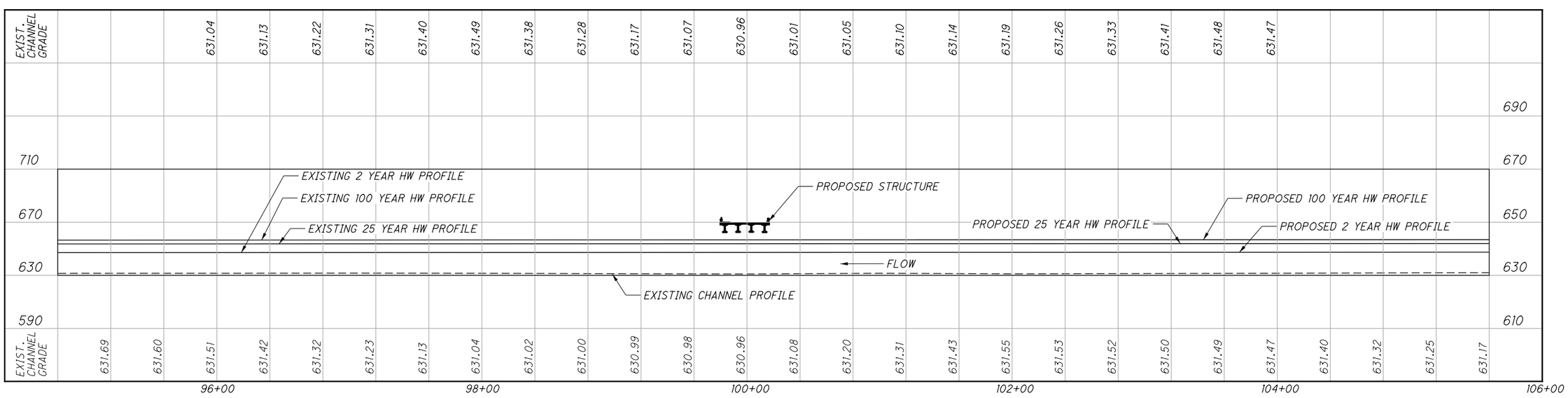

HYDRAULIC PROFILE ALONG ℄ OF CHANNEL

Mannik Smith GROUP
9800 INDIAN WOOD CIRCLE
MAUMEE, OHIO 43537

DESIGNED	DRAWN	REVIEWED	DATE
KRH	KRH	BWP	04/2014
CHECKED	REVISED	STRUCTURE FILE NUMBER	
SCT			

SUPPLEMENTAL SITE PLAN
HEN-INDUSTRIAL DRIVE-0000
INDUSTRIAL DRIVE OVER MAUMEE RIVER

HEN-IND-00.00
PID No. 22984

W:\Projects\Projects F-J\H25300021\22984\structures\HENIND_0000\Sheets\IND_0000_SUPP_SITE001.DGN 9/10/2014 5:18:53 PM SValentin

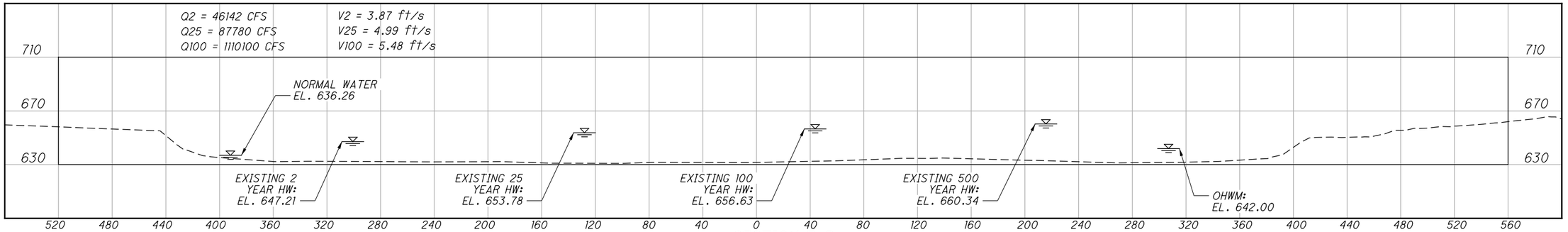

SECTION B-B

(STA. 100+00.00 EXISTING STRUCTURE)

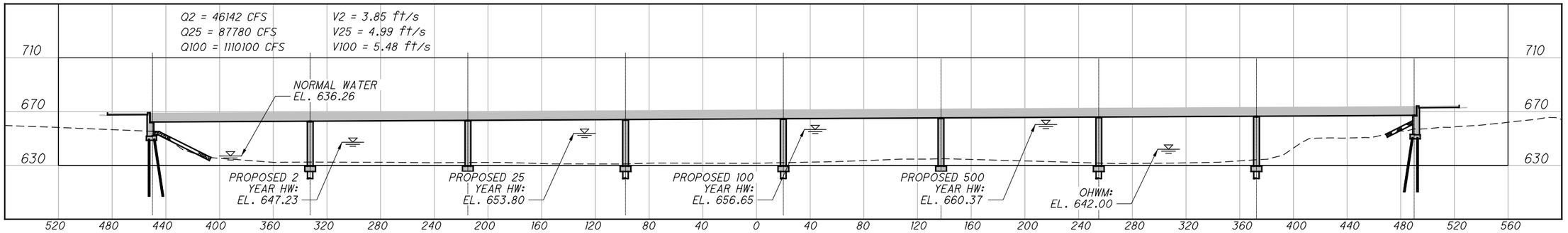

SECTION B-B

(STA. 100+00.00 PROPOSED STRUCTURE)

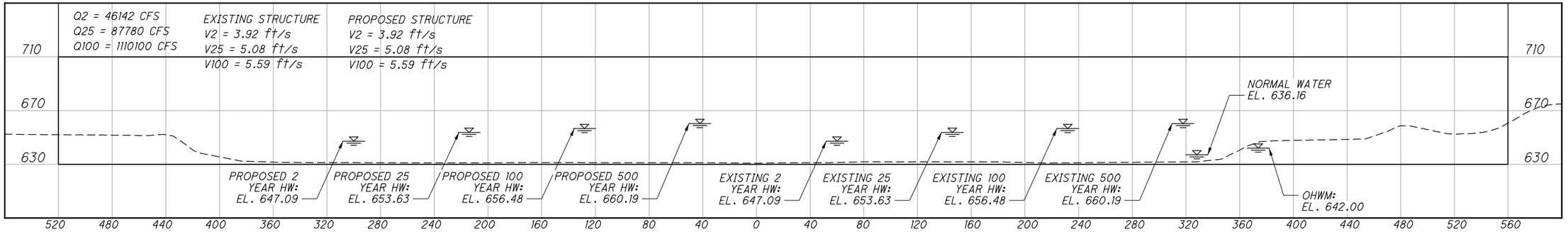

SECTION A-A

(STA. 95+00.00 DOWNSTREAM PROPOSED STRUCTURE)

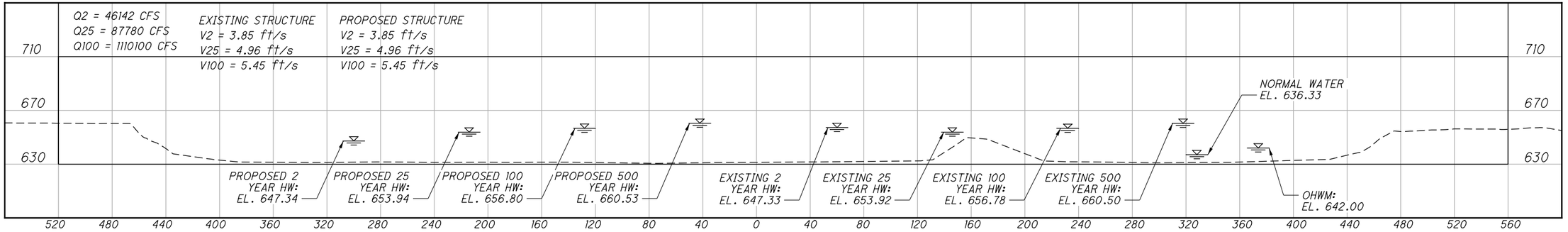

SECTION C-C

(STA. 105+00.00 UPSTREAM PROPOSED STRUCTURE)

NOTE

500 YEAR FLOOD ELEVATION EVALUATED IN LIEU OF HISTORIC HIGH WATER MARK

Mannik Smith GROUP
1800 INDIAN WOOD CIRCLE
MAUMEE, OHIO 43537

DESIGNED	DRAWN	REVIEWED	DATE
KRH	KRH	BWP	04/2014
CHECKED	REVISED	STRUCTURE FILE NUMBER	
SCT			

SUPPLEMENTAL SITE PLAN

HEN-INDUSTRIAL DRIVE-0000
INDUSTRIAL DRIVE OVER MAUMEE RIVER

HEN-IND-00.00

PID No. 22984

W:\Projects\Projects F-J\H25300\22984\structures\HENIND_0000\Sheets\IND_0000_SUPP_SITE002.DGN 9/10/2014 5:18:55 PM SValentin